OBSERVATORY ADDITION TO THE RANCHO MIRAGE PUBLIC LIBRARY

71100 CA-111, RANCHO MIRAGE, CA 92270

ABBREVIATIONS

ABV	ABOVE
A.F.F.	ABOVE FINISH FLOOR
ACC	ACCESS
A.P.	ACCESS PANEL
A/C	AIR CONDITIONING
ALT	ALTERNATE
ANC	ANCHOR / ANCHORAGE
A.B.	ANCHOR BOLT
ANOD	ANODIZED
A.D.	AREA DRAIN
AUTO	AUTOMATIC
BSMT	BASEMENT
BRG	BEARING
BPL	BEARING PLATE
BM	BEAM
BJT	BED JOINT
BEL	BELOW
BLKG	BLOCKING
BD	BOARD
BS	BOTH SIDES
BW	BOTH WAYS
BOT	BOTTOM
BRZ	BRONZE
BLDG	BUILDING
B.U.	BUILT UP
CAB	CABINET
CAD	CADMIUM
CPT	CARPET
C.I.	CAST IRON
C.B.	CATCH BASIN
CLG	CEILING
C.D.	CEILING DIFFUSER
C.J.	CEILING JOIST
CER	CERAMIC
C.T.	CERAMIC TILE
CHAM	CHAMFER
CLR	CLEAR/CLEARANCE
COMB	COMBINATION
CONC	CONCRETE
CMU	CONC MASONRY UNIT
CONN	CONNECTION
CONT	CONTINUOUS
CU	COPPER
CORR	CORRUGATED
CFT	CUBIC FEET
CFM	CFT PER MINUTE
CYD	CUBIC YARD
DEM	DEMOLISH
DTL	DETAIL
DIAG	DIAGONAL
DIA	DIAMETER
DIM	DIMENSION
DISP	DISPOSAL
DISP	DISPENSER
DIV	DIVISION
DR	DOOR
DBL	DOUBLE
DH	DOUBLE HUNG
DS	DOWNSPOUT
D	DRAIN
DWR	DRAWER
DWG	DRAWING
D.F.	DRINKING FOUNTAIN
DF	DOUGLAS FIR
DW	DISH WASHER
EA	EACH
	EAST
ELEC	ELECTRIC
EWC	ELEC WATER COOLER
EL	ELEVATION
ENC	ENCLOSURE
EQ	EQUAL
EXST	EXISTING
E.B.	EXPANSION BOLT
EJ	EXPANSION JOINT
EXP	EXPOSED
EXT	EXTERIOR
FOC	FACE OF CONCRETE
FOM	FACE OF MASONRY
FOS	FACE OF STUD
FIN	FINISH
FG	FIN GRADE
FFL	FINISH FLOOR LINE
F.E.	FIRE EXTINGUISHER
FP	FIRE PROOF
FLG	FLASHING
FLR	FLOOR
FLCO	FLOOR CLEAN OUT
F.D.	FLOOR DRAIN
F.J.	FLOOR JOIST
FLUOR	FLUORESCENT
FT	FOOT OR FEET
FTG	FOOTING
GA	GAUGE
GALV	GALVANIZED
GL	GLASS OR GLAZING
G.L.B.	GLUE LAMINATED BM
GD	GRADE
GYP	GYPSUM
HDW	HARDWARE
HDR	HEADER
HTG	HEATING
HVAC	HTG, VENTILATING & AIR CONDITIONING
HT	HEIGHT
HC	HOLLOW CORE
HM	HOLLOW METAL
HORIZ	HORIZONTAL
HB	HOSE BIB
I.D.	INSIDE DIAMETER
INSUL	INSULATION
INT	INTERIOR
INV	INVERT
JST	JOIST
LBL	LABEL
LAM	LAMINATE
LT	LIGHT
LL	LIVE LOAD
LVR	LOUVER
MAS	MASONRY
MO	MASONRY OPENING
MAX	MAXIMUM
MECH	MECHANICAL
MC	MEDICINE CABINET
NAT	NATURAL
NG	NAT GRADE
N	NORTH
NIC	NOT IN CONTRACT
NTS	NOT TO SCALE
O.D.	OUTSIDE DIAMETER
OPP	OPPOSITE
PNL	PANEL
PVMT	PAVEMENT
PED	PEDESTAL
PERF	PERFORATE
PL	PLATE/PLATE LINE
PLYWD	PLYWOOD
PCF	POUNDS/CU. FT.
R or RAD	RADIUS
RDWD	REDWOOD
REF	REFERENCE
REF.	REFRIGERATOR
REINF	REINFORCE
REQ	REQUIRED
RA	RETURN AIR
R.O.W.	RIGHT OF WAY
RS	RF-SAWN
RB	RUBBER BASE
SECT	SECTION
SHTG	SHEATHING
SHT	SHEET
SH	SHELVING / SHELF
TOC	TOP OF CURB
TOS	TOP OF SLAB
TOW	TOP OF WALL

ASSOCIATIONS AND INSTITUTES

ACI	AMERICAN CONCRETE INSTITUTE
AGA	AMERICAN GAS
AIA	AMERICAN INSTITUTE OF ARCHITECTS
AISC	AMERICAN INSTITUTE OF STEEL CONSTRUCTION
AITC	AMERICAN INSTITUTE OF TIMBER CONSTRUCTION
ASTM	AMERICAN SOCIETY FOR TESTING MATERIALS
ASA	AMERICAN STANDARDS ASSOCIATION
AWWA	AMERICAN WATER WORKS ASSOCIATION
AWS	AMERICAN WELDING SOCIETY
CSI	CONSTRUCTION SPECI-FICATION INSTITUTE
ICBO	INTERNATIONAL COUNCIL OF BUILDING OFFICIALS
NBS	NATIONAL BUREAU OF STANDARDS
UL	UNDERWRITERS LABORATORY

UTILITY & SERVICE PROVIDER CONTACTS

ELECTRIC
SOUTHERN CALIFORNIA EDISON
(800) 684-8123

GAS
SOUTHERN CALIFORNIA GAS
(800) 427-2200

CABLE
TIME WARNER CABLE
(760) 340-2225

WATER
COACHELLA VALLEY WATER DISTRICT
(760) 398-2651

TELEPHONE
VERIZON
(800) 483-5000

LAW ENFORCEMENT
RIVERSIDE COUNTY SHERIFF
(760) 836-1600

FIRE AGENCY
RIVERSIDE COUNTY FIRE DISTRICT
(760) 324-4511 #307

WASTE MANAGEMENT
BURRTEC
(760) 340-2225

DEVELOPMENT CRITERIA

PROJECT DESCRIPTION:

PROJECT INCLUDES THE DEVELOPMENT OF A NEW COMPLEX LOCATED IN THE CURRENT PARKING AREA OF THE CITY OF RANCHO MIRAGE PUBLIC LIBRARY PROPERTY

ZONING: C-2 GEN. PLAN = LIGHT INDUSTRIAL

GOVERNING CODES: 2013 CALIFORNIA TITLE 24 BUILDING CODES PARTS 1-5, AND 11,12 (ADMINISTRATIVE, BUILDING, ELECTRICAL, MECHANICAL, PLUMBING, ENERGY, GREEN CODE), 2013 FIRE CODE TITLE 24, PART 9, NFPA STANDARDS AS ADOPTED IN TITLE 24.

CLIMATE ZONE:	15	BASIC WIND SPEED	85 mph
SEISMIC ZONE:	4	WIND EXPOSURE	"C"
RAIN FALL	2" PER HR.		

BUILDING HEIGHT:	35'-0" MAX
OCCUPANCIES:	GROUP B AND U
CONSTRUCTION TYPE:	CONSTRUCTION TYPE V B
FIRE SPRINKLERS:	YES (REQUIRED BY CITY ORDINANCE)
1,400 SQ. FT.	DEFERRED SUBMITTAL

PROJECT SITE DATA

WOOD FINISH
CONCRETE IN CROSS SECTION
BRICK OR CONC. BLOCK ELEVATION
PLYWOOD CROSS SECTION
CROSS HATCHING (MASONRY OR BRICK IN CROSS SECTION)
STEEL SECTION IN CROSS SECTION
FIRE-BRICK CROSS SECTION
PLASTER ELEVATION OR CONCRETE PAVING
CER. TILE ELEVATION OR PLAN VIEW
ROLL OR BATT INSULATION
EARTH (SOIL) IN CROSS SECTION
STRUCTURAL WOOD MEMBER SECTION CONTINUOUS
RIGID INSULATION
GRAVEL IN CROSS SECTION
STRUCTURAL WOOD MEMBER SECTION BAY BLOCKING

REFERENCE SYMBOLS

SHEET REFERENCE NORTH
SECT./ELEV/DET. (X/Y) SCALE — REFERENCE NO.
01 KEYED REFERENCE NUMBER
308 NAME & ROOM NUMBER
DETAIL NO. / SHEET (WHERE DRAWN)
3 DOOR OPENING NUMBER
1 WINDOW TYPE
ELEVATION NO. / ARROW POINTS IN DIRECTION OF VIEW / SHEET (WHERE DRAWN)
101 EQUIPMENT/FURNITURE ITEM NUMBER
BUILDING ELEVATION
100.00 N.G. / 101.20 F.G. ELEVATION MARKER
SECTION (IDENTIFICATION) / ARROW POINTS IN DIRECTION OF VIEW / SHEET (WHERE DRAWN)
SEE ABBREVIATIONS
1 REVISION MARKER

VICINITY MAP

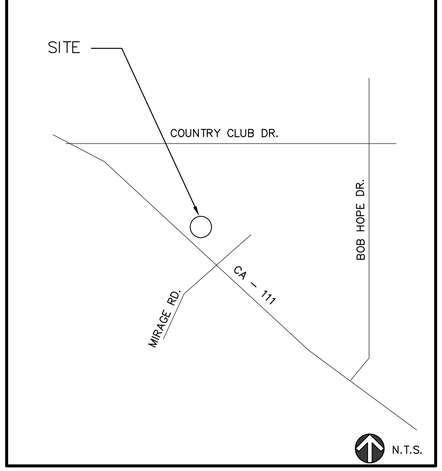

PROJECT TEAM

APPLICANT
CITY OF RANCHO MIRAGE
(760) 770-3224

c/o RANDY VIEGAS, PMP
PROJECT MANAGER
(760) 770-3224 ext. 242
randy@RanchoMirageCA.gov
69825 Highway 111, Rancho Mirage CA 92270

ARCHITECT
NARKWEATHER ARCHITECTS INC.
CHARLES MARTIN
(760) 346-4090
Gerald Shingleton, NCARB
(520) 840-9613 (cell)

STRUCTURAL ENGINEER
WYNN ENGINEERING, INC.
JACK STARLIN
(760) 749-8722

MECHANICAL ENGINEER
SCOTT DESIGN & TITLE 24
TIM SCOTT
(760) 200-4780

CIVIL
BOB MAINIERO
(760) 413-7127

ELECTRICAL ENGINEER
MRC CORPORATION
VICTOR LEON
(760) 340-9005

LANDSCAPE
RAY LOPEZ ASSOCIATES
RAY LOPEZ
(760) 206-9696

SOILS ENGINEERING
LANDMARK
GREG CHANDRA
(760) 455-9345

LOCAL REGULATIONS

CONSTRUCTION ACTIVITY SHALL NOT OCCUR BETWEEN THE HOURS OF 7:00 PM AND 7:00 AM MONDAY THROUGH SATURDAY AND NO ACTIVITY ON SUNDAYS AND FEDERAL HOLIDAYS.

COMPLY WITH THE CITY SECURITY ORDINANCE. A COPY IS AVAILABLE FROM THE CITY OR THE CITY OFFICIAL WEB SITE.

THE COLOR SPECIFICATION FOR ANY AND ALL SIGN POSTS AND LIGHTING POLES (WHERE AND IF NECESSARY AND REQUIRED) TO BE TIGER DRYLAC RAL - EXTERIOR POWDER COATING (#RAL8007) LOCALLY IDENTIFIED AS "RANCHO MIRAGE BROWN".

SHEET INDEX

SHT. #	DWG'S NO.	DRAWING TITLE
SCOPE		
1	T1	TITLE SHEET
2	T2	GENERAL NOTES
3	T3	PROJECT KEY REFERENCE NOTES
4	T4	CODE ANALYSIS
GENERAL		
5	G1	ACCESSIBLE STANDARDS
6	G2	ACCESSIBILITY COMPLIANCE NOTES
7	G3	ACCESS, FINISH NOTES AND DETAILS
8	G4	ENVELOPE ASSEMBLY DETAILS
9	G5	Cal Green REQUIREMENTS
10	G6	Cal Green REQUIREMENTS
CIVIL		
11	C1	SITE and GRADING
12	C2	WATER AND SEWER PLAN
13	C3	SECTIONS
14	C4	PM-10
15	C5	NOTES
ARCHITECTURAL		
16	A1	SITE REFERENCE PLAN
17	A2.1	BASEMENT FLOOR PLAN
18	A2.2	MAIN FLOOR PLAN
19	A2.3	REFLECTED CEILING PLAN & ROOF PLAN
20	A2.4	INTERIOR DETAILS
21	A2.5	DOOR SCHEDULE
22	A2.6	DOOR AND GATE DETAILS
23	A3.1	EXTERIOR ELEVATIONS
24	A3.2	ELEVATIONS, SECTIONS, AND DETAILS
25	A3.3	BUILDING SECTIONS
26	A4.1	WALL SECTIONS
27	A4.2	WALL SECTIONS
28	A4.3	WALL SECTIONS
29	A4.4	SECTION DETAILS
30	A4.5	SECTION DETAILS
31	A5.1	DOME SECTION DETAILS
32	A5.2	CASEWORK AND MANUFACTURER'S DETAILS
STRUCTURAL		
33	S0	GENERAL NOTES AND SPECIFICATIONS
34	S1.0	FOUNDATION PLAN
35	S2.0	FLOOR & DECK FRAMING PLAN
36	S3.0	ROOF FRAMING PLAN
37	S4.0	FOUNDATION DETAILS
38	S4.1	ROOF FRAMING PLAN
39	S5.0	FRAMING DETAILS
40	S5.1	FRAMING DETAILS
41	S5.2	FRAMING DETAILS
PLUMBING		
42	P1	PLUMBING PLAN
43	P2	PLUMBING ISOMETRICS AND DETAILS
MECHANICAL		
44	M1.0	HVAC PLAN (BASEMENT)
45	M1.1	HVAC PLAN (MAIN LEVEL)
46	M2.0	HVAC SECTION
47	M3.0	HVAC NOTES AND DETAILS
48	M4.0	CALIFORNIA TITLE 24 ENERGY COMPLIANCE
49	M4.1	CALIFORNIA TITLE 24 ENERGY COMPLIANCE
ELECTRICAL		
50	E1.0	ELECTRICAL GENERAL NOTES / LEGEND
51	E1.1	ELECTRICAL SCHEDULE / DETAILS
52	E1.2	SINGLE LINE DIAGRAM
53	E2.0	ELECTRICAL SITE PLAN
54	E3.0	ELECTRICAL BASEMENT PLAN
55	E4.0	ELECTRICAL POWER AND LIGHTING PLAN
LANDSCAPING		
56	L1	LANDSCAPING PLAN

Narkweather ARCHITECTS INC.
73 330 HWY 111, SUITE A / PALM DESERT, CA 92260-4016
PHONE: (760) 346-4090 / E-MAIL: info@narkweather.net

OWNERSHIP OF DOCUMENTS
DRAWINGS AND SPECIFICATIONS AS INSTRUMENTS OF SERVICE ARE AND SHALL REMAIN THE PROPERTY OF THE DESIGNER WHETHER THE PROJECT FOR WHICH THEY WERE PREPARED IS EXECUTED OR NOT. THEY ARE NOT TO BE USED ON OTHER PROJECTS OR EXTENSIONS TO THIS PROJECT EXCEPT BY AGREEMENT IN WRITING AND WITH APPROPRIATE COMPENSATION TO Narkweather Architects Inc.
COPYRIGHT 2016 Narkweather Architects

CITY OF RANCHO MIRAGE
OBSERVATORY
Rancho Mirage Public Library
PROJECT DESCRIPTION
71-100 California 111, Rancho Mirage, CA 92270
SITE ADDRESS

SHEET CONTENT
TITLE SHEET

DRAWING SCALE: NONE

ISSUE DATE		
MONTH	DAY	YEAR
SEPT.	29	2016

1	REVISION DATE:
2	REVISION DATE:
3	REVISION DATE:
	REVISION DATE:
	REVISION DATE:

(FOR DECK STAMPS ONLY)
RECOMMENDED FOR APPROVAL BY:
LELAND E. COLE — DATE 9/27/16
R.C.E. 47159 EXP. 12/31/17
APPROVED BY CITY OF RANCHO MIRAGE:
WILLIAM A. EMOS, CITY ENGINEER — DATE
R.C.E. 43918 EXP. 6/30/2017

DRAWING NUMBER
T1
SHEET # 1 OF 56
PRIVATE REFERENCE #
CITY REFERENCE #

Bid Set - 10/07/2016

SPECIAL INSPECTION

IN ADDITION TO THE REGULAR INSPECTIONS, THE FOLLOWING
ITEMS WILL ALSO REQUIRE "SPECIAL INSPECTION" .
IN SEISMIC ZONE 4, STRUCTURAL OBSERVATION IS REQUIRED

ITEM	REMARKS
SOILS COMPLIANCE PRIOR TO FOUNDATION INSPECTION	SEE SOILS REPORT
FIELD WELDING	SEE STRUCTURAL DRAWINGS
HIGH-STRENGTH BOLTS	SEE STRUCTURAL DRAWINGS
STRUCTURAL MASONRY	STRESS VALUE DOUBLED
DESIGNER SPECIFIED	SEE STRUCTURAL DRAWINGS
SEISMIC OBSERVATION	SEE NOTE BELOW

ITEM	MANUFACTURER	ICC-ES (evaluation report #)
METAL FRAMING	(CEMCO) / WARE INDUSTRIES	ESR-3016
FRAMING ANCHORS	SIMPSON	NER-469
RETROFIT FASTENERS	RAMSET RED-HEAD	ESR-1639
INSULATION BOARD	DOW CHEMICAL	ESR-1659
PORTLAND CEM. PLASTER	BMI PRODUCTS	ESR-2535

ALL OR EQUAL SUBSTITUTIONS MUST BE SUBMITTED TO AND APPROVED BY THE CITY BUILDING OFFICIAL PRIOR TO INSTALLATION..

FIXED APPLIANCES ARE REQUIRED TO BE SECURELY FASTENED IN PLACE.

ANY ITEMS (SUCH AS ENGINEERED PRODUCTS, DOME ASSEMBLY, AUTOMATIC FIRE EXTINGUISHING SYSTEMS, DOME ANCHORAGE, ETC.) THAT WILL HAVE A DEFERRED SUBMITTAL SHALL BE SUBMITTED TO THE ARCHITECT WHO SHALL REVIEW AND FORWARD THEM TO THE BUILDING OFFICIAL WITH A NOTATION INDICATING THAT THE DEFERRED SUBMITTAL DOCUMENTS HAVE BEEN REVIEWED AND THAT THEY HAVE BEEN FOUND TO BE IN GENERAL COMPLIANCE WITH THE DESIGN OF THE BUILDING. THE DEFERRED SUBMITTAL ITEMS SHALL NOT BE INSTALLED UNTIL THEIR DESIGN AND SUBMITTAL DOCUMENTS HAVE BEEN APPROVED BY THE BUILDING OFFICIAL.

N O T E ; DEFERRED SUBMITTAL ITEMS SHALL NOT BE INSTALLED UNTIL THEIR DESIGN AND SUBMITTAL DOCUMENTS HAVE BEEN APPROVED BY THE BUILDING OFFICIAL.

LOCAL ENFORCEMENT DATA CHECK LIST

TEMPORARY PEDESTAL IS APPROVED FOR ELECTRICAL SERVICE DURING CONSTRUCTION.
NO POWER TOOLS ARE ALLOWED USING GENERATOR(S).

ALL WORK (IMPROVEMENTS) SHALL COMPLY WITH ALL ENTITIES HAVING JURISDICTION WITH RESPECT TO WORK OR IMPROVEMENTS FOR THIS PROJECT

ALL GLAZING SHALL HAVE A TEMPORARY LABEL ON THE PRODUCT UNTIL THE FIELD INSPECTOR HAS INSPECTED IT.

MANDATORY REQUIREMENTS INCLUDE THE APPLICANT'S RESPONSIBILITY TO PROOVE THE INSTALLATION OF STATE APPROVED OR LISTED FEATURES, DEVICES, AND EQUIPMENT AND TO COMPLY WITH APPLICABLE REGULATIONS.

ALL PRODUCTS LISTED BY I.C.B.O. / N.E.R. NUMBERS SHALL BE INSTALLED PER THE REPORT AND MANUFACTURER'S WRITTEN INSTRUCTIONS. PRODUCT SUBSTITUTIONS FOR PRODUCTS LISTED SHALL ALSO HAVE I.C.B.O. APPROVED EVALUATION REPORTS OR BE APPROVED AND LISTED BY OTHER NATIONALLY RECOGNIZED TESTING AGENCIES.

ALL LOCAL ORDINANCES AND RELEVANT CODES MUST BE ADHERED TO WHETHER OR NOT SPECIFICALLY REFERENCED.

CONTRACTORS ARE REQUIRED TO REVIEW ALL SPECIFICATIONS, DRAWINGS, NOTES, AND DETAILS. CONTRACTORS ARE ENTIRELY RESPONSIBLE FOR THE CONSTRUCTION DOCUMENTS AND TO PERFORM WORK IN COMPLIANCE WITH THE CONTENTS.

VERIFY ANY AND ALL EASEMENTS AND RIGHT OF WAYS AND ARRANGE FOR ENCROACHMENT PERMITS AS REQUIRED AND NECESSARY.

VERIFY ALL REQUIREMENTS FOR UTILITY HOOK-UPS INCLUDING "WILL-SERVE" ACKNOWLEDGEMENT LETTERS, STATEMENTS, AND FEES.

SHOP DRAWINGS ARE NECESSARY FOR CERTAIN ASPECTS OF THE WORK. THIS INCLUDES MANUFACTURED ENGINEERED ASSEMBLIES, STEEL COLUMNS AND BEAMS, ETC. THE ARCHITECT SHALL REVIEW AND APPROVE SHOP DRAWINGS PRIOR TO FABRICATION. THE ENFORCEMENT AUTHORITY SHALL ALSO REVIEW AND APPROVE PRIOR TO FABRICATION.

THE CONTRACTOR IS REQUIRED TO MAINTAIN AND PROVIDE SANITARY TOILET FACILITIES ON THE SITE DURING THE ENTIRE CONSTRUCTION.

FINISH FLOOR ELEVATION (AS BUILT) SHALL BE CERTIFIED FOR THE FEDERAL EMERGENCY MANAGEMENT ASSOCIATION (F.E.M.A.) WHERE REQUIRED.

CONSTRUCTION COMPLIANCE REQUIRES USING WORKING DRAWINGS STAMPED AND APPROVED BY THE LOCAL GOVERNING AUTHORITY. VERIFY THE CURRENT REVISION DATE WITH THE ARCHITECT PRIOR TO THE COMMENCEMENT OF THE WORK. ONLY THE LATEST PLAN REVISION DATE ON THE WORKING DRAWINGS SHALL BE USED IN CONJUNCTION W/ THE WORK.

VERIFY REQUIRED INSPECTIONS FROM THE LOCAL GOVERNING AUTHORITY.
MINIMUM REQUIREMENTS ARE

PRE-CONSTRUCTION: ARCHITECT TO MEET WITH CONTRACTOR PRIOR TO CONSTRUCTION.

BUILDING INSPECTIONS: FOUNDATION, FRAMING, ROUGH ELECTRICAL, ROUGH PLUMBING, ROUGH MECHANICAL, AND FINAL

ARCHITECT'S INSPECTION PRIOR TO ROOF COVERING, INSPECT SHEAR AND DIAPHRAGM NAILING ALONG WITH STRUCTURAL FRAMING COMPLIANCE

NO TRENCHES FIVE FEET IN DEPTH OR MORE INTO WHICH A PERSON IS REQUIRED TO ASCEND ARE PERMITTED UNLESS THE NECESSARY PERMIT IS OBTAINED FROM THE STATE DIVISION OF INDUSTRIAL SAFETY, PRIOR TO THE ISSUANCE OF A BUILDING OR GRADING PERMIT

EXIT / FIRE DEPARTMENT NOTES

1. Exits shall be illuminated at any time the building is occupied, with light having an intensity of no less than one foot-candle at floor level.
2. Fire damper assemblies, including sleeves and installation procedures, by the Building Inspector prior to installation.
3. A type 2A fire extinguishers is required on site during construction.

GENERAL NOTES

1. GENERAL CONTRACTOR MUST INSPECT AND VERIFY ALL EXISTING CONDITIONS AND DIMENSIONS PRIOR TO SUBMITTING A BID OR COMMENCING WORK.
   IT IS THE GENERAL CONTRACTOR'S RESPONSIBILITY TO REVIEW ALL NOTES, DETAILS, PLANS, SHOP-DRAWINGS, SPECIFICATIONS, REPORTS AND DATA. ANY DEVIATIONS AND CONSTRUCTION OPTIONS THAT ARE EXERCISED IN THE FIELD ARE SUBJECT TO NON-COMPLIANCE CORRECTIONS. THE ARCHITECT IS ENTITLED TO ADDITIONAL COMPENSATION PAID BY THE CONTRACTOR IN THE EVENT THAT OPTIONS ARE DISCOVERED OR REQUESTED.
2. IN ADDITION TO CONTRACT DOCUMENTS, SPECIFICATIONS AND DRAWINGS, THE CURRENT EDITION OF . A.I.A. DOCUMENT A201 SHALL BE UTILIZED DURING CONSTRUCTION.
3. COMPLY WITH LOCAL REQUIREMENTS OF OSHA RULES AND REGULATIONS.
4. SECURITY SYSTEMS MUST COMPLY WITH STATE AND LOCAL REGULATIONS.
5. GENERAL CONTRACTOR MUST VERIFY DIMENSIONS ON DRAWINGS AND BRING ALL DISCREPENCIES TO THE ATTENTION OF THE ARCHITECT PRIOR TO BIDDING AND CONSTRUCTION.
6. GENERAL CONTRACTOR MUST COORDINATE ALL UTILITY SERVICE REQUIREMENTS FOR THE FACILITY (electrical, telephone, water, sewer, etc.) PRIOR TO CONSTRUCTION.
   VERIFY EXISTENCE AND LOCATIONS OF ALL ABOVE AND BELOW GRADE UTILITIES.
8. DEMOLITION AND CONSTRUCTION SHALL BE CONDUCTED IN A MANNER WHICH OFFERS AND PROVIDES PROTECTION OF PEDESTRIANS AND VEHICLES AND COMPLY WITH ALL ASPECTS OF THE C.B.C.
9. GENERAL CONTRACTOR MUST REPLACE AND REPAIR STRUCTURES, FINISHES, EQUIPMENT, PIPING, CONDUIT, WIRING, ETC. WHICH MAY BE DAMAGED OR ARE TO BE RELOCATED OR ALTERED TO MAKE WAY FOR NEW CONSTRUCTION ACTIVITY.
10. CONSTRUCTION METHODS AND SCHEDULES MUST BE APPROVED BY THE CITY AND SHALL BE ARRANGED TO SUIT PUBLIC AND CUSTOMER CONVENIENCE AND OPERATIONS OF THE EXISTING FACILITY AND/OR ADJOINING PROPERTIES / BUSINESSES.
11. AT THE END OF EACH DAILY WORK PERIOD THE GENERAL CONTRATOR SHALL SECURE, PROTECT, BARRICADE AND BROOM CLEAN THE PREMISES AND LEAVE UNUSED MATERIALS STACKED OR STORED. ON COMPLETION, REMOVE ALL DEBRIS, EQUIPMENT, ETC. GENERATED BY OR NECESSARY FOR, THE CONSTRUCTION AND LEAVE THE PREMISES BROOM CLEAN.
12. ALL REFUSE IS TO BE PROPERLY DISPOSED OF AT SANITARY LANDFILL, CONTACT GOVERNING AUTHORITY FOR DUMPSTER AND DUMPING INFORMATION
13. ALL DEVIATIONS AND CONSTRUCTION OPTIONS EXERCISED IN THE FIELD ARE SUBJECT TO NON-COMPLIANCE CORRECTIONS. THE ARCHITECT IS ENTITLED TO ADDITIONAL COMPENSATION PAID FOR BY THE GENERAL CONTRACTOR, IN THE EVENT DESIGN OPTIONS ARE UTILIZED IN LIEU OF WHAT IS SPECIFICALLY INDICATED ON CONTRACT DOCUMENTS.
14. DISCREPANCIES AND/OR OMISSIONS FROM THE CONTRACT DOCUMENTS THAT ARE DISCOVERED DURING CONSTRUCTION BY THE CONTRACTOR OR ANY QUESTION(S) REGARDING MEANING OR INTENT SHALL BE IMMEDIATELY BROUGHT TO THE ATTENTION OF THE PROJECT ARCHITECT FOR INTERPRETATION AND CLARIFICATION. THE GENERAL CONTRACTOR IS RESPONSIBLE FOR REVIEWING DIMENSIONS AND TO NOTIFY THE ARCHITECT OF ANY CONFLICTS BETWEEN THE DRAWINGS AND ACTUAL FIELD CONDITIONS. THIS MUST BE DONE PRIOR TO THE EXECUTION OF THE WORK. THE FOLLOWING RULES APPLY:
    A. Notes and details on drawings generally take precedence over general notes.
    B. Detail call-outs apply to all similar situations whether referenced or not.
    C. Dimensions take precedence over scale (always).
    D. The most restrictive or larger size takes precedence in case of a conflict w/ callouts or details. Generally, reference details drawn at the larger scale will take precedence over any conflicts indicated on the smaller scaled drawing.
    E. In no case shall work occur if specifications or details knowingly violate local ordinances or code regulations. The Architect shall be notified immediately for compliance resolution. All labor and materials used must equal or exceed applicable state or local code requirements.
15. CONTRACTOR AND SUB-CONTRACTORS SHALL TAKE PRECAUTIONS AND VERIFY THE FOLLOWING PRIOR TO THE COMMENCEMENT OF CONSTRUCTION OR PARTICULAR WORK:
    A. Familiarize themselves with local standards and requirements, these construction documents, and the construction site.
    B. Complete all work in acceptable industry standard craftsman like manner.
    C. Complete the work in full accord with adopted codes and ordinances.
    D. Protect the public and adjacent properties from damage throughout construction.
    E. Properly disconnect existing utilities to be abandoned and plug or cap as required by code and sound construction practices.
16. CONTRACTOR(S) SHALL HOLD HARMLESS AND INDEMNIFY THE OWNER AND THE ARCHITECT FOR ANY AND ALL CLAIMS, LIABILITY, LOSS, DAMAGE, COSTS, EXPENSES (INCLUDING ATTORNEY'S FEES), AND COSTS OF INVESTIGATION AND LITIGATION, AWARDS, AND FINES, OR JUDGEMENTS IMPOSED BY LAW OR ARISING BY REASON OF THE DEATH OR BODILY INJURY TO PERSONS INCLUDING EMPLOYEES OF THE CONTRACTOR, INJURY TO PROPERTY, EQUIPMENT, AND MATERIAL RESULTING FROM VIOLATIONS OF GOVERNING AUTHORITY REQUIREMENTS OR CARELESSNESS IN IMPLEMENTING THE CONTRACT THAT REFERENCES WORKING DRAWINGS, SPECIFICATIONS, AND OTHER CONTRACT DOCUMENTS.
17. CONTRACTOR(S) SHALL BE HELD RESPONSIBLE FOR ANY AND ALL EXPENSES INCURRED IN SPECIFIC CONJUNCTION WITH TEARING, RAZING, AND REPAIRING THE WORK OF ANY CONTRACTOR OR WORKMAN ASSOCIATED WITH THE PROJECT AS A RESULT OF DEFECTIVE LABOR, CRAFTSMANSHIP, OR MATERIAL PERFORMED OR SUPPLIED BY THE CONTRACTOR(S).
18. At the completion of the work, the contractor shall provide the following services.....
    Remove all putty, stains, paint, labels, etc. from glass and mirrors.
    Wash and polish inside and out.
    Replace any and all damaged glazing which is scratched, cracked, missing, or broken.
    Remove dirt, marks, stains, finger-prints, and other soil from painted, decorated or stained surfaces.
    Remove spots, soil, and paint from finish concrete.
    Remove all temporary floor coverings and clean/polish floors.
19. Clean all exterior and interior metal surfaces including door hardware, windows, etc. Leave without blemishes.
20. The contractor(s) shall provide (as confirmation) the following to the owner....
    Proof of contractor's bonding requirements by the state.
    Contractor's General liability Insurance.
    General liability Insurance.
    Workman's Compensation.
    Course of construction insurance.
21. Sizes of mechanical and electrical equipment pads and bases are approximate only. Contractor shall verify dimensions of all pads and bases with equipment supplier.
22. General contractor shall provide all blocking as required by utilities, signs, equipment, etc.
    Paint all adjacent surcaces or background grilles, diffusers, metal trim, accessories, etc.
    There shall be no exposed conduit, ducts, vents, etc. in public areas.
23. All extras and/or change orders shall be approved in writing by the architect, owner and the general contractor prior to purchase and/or installation of said work. Only extra work or requirements requested by the local building official will be considered by the architect.

GENERAL REQUIREMENTS

DISCREPANCIES AND/OR OMISSIONS FROM THESE DRAWINGS THAT ARE DISCOVERED DURING CONSTRUCTION BY THE CONTRACTOR OR ANY QUESTION9S0 REGARDING THE MEANING OR INTENT SHALL BE IMMEDIATELY BROUGHT TO THE ATTENTION OF THE ARCHITECT FOR INTERPRETATION AND CLARIFICATION. THE CONTRACTOR IS RESPONSIBLE FOR REVIEWING DIMENSIONS AND TO NOTIFY THE ARCHITECT OF ANY CONFLICTS BETWEEN THE DRAWINGS AND ACTUAL FIELD CONDITIONS. THIS SHOULD BE DONE PRIOR TO THE WORK.

THE FOLLOWING RULES APPLY FOR ANY POSSIBLE CONFLICTS WHICH MAY OCCUR.

NOTES AND DETAILS ON DRAWINGS APPLY AND TAKE PRECEDENCE OVER GENERAL NOTES.

DIMENSIONS ALWAYS TAKE PRECEDENCE OVER SCALE.

THE MOST RESTRICTIVE OR LARGER SIZE TAKES PRECEDENCE IN CASE OF CONFLICTS. GENERALLY THE LARGER SCALED DRAWING GOVERNS UNLESS A MORE RESTRICTIVE NOTATION OCCURS ELSEWHERE.

IN NO CASE SHALL WORK COMMENCE IF SPECIFICATIONS OR DRAWINGS KNOWINGLY VIOLATE LOCAL ORDINANCES OR GOVERNING CODES. NOTIFY THE ARCHITECT IMMEDIATELY TO RESOLVE OR RECOMMEND COMPLIANCE METHODS.

THE GENERAL AND SUB-CONTRACTORS ARE REQUIRED TO TAKE PRECAUTIONS AND VERIFY THE FOLLOWING...

FAMILIARIZE THEMSELVES WITH ALL LOCAL STANDARDS AND REQUIREMENTS, CONSTRUCTION DOCUMENTS, AND ALL ISSUES INVOLVING THE SITE OF CONSTRUCTION.

COMPLETE THE WORK IN FULL ACCORD WITH ADOPTED CODES AND ORDINANCES.

PROVIDE ASSISTANCE, COORDINATION, AND INSTALLATION (WHEN REQUIRED) FOR ALL TECHNICAL ITEMS, INSTRUMENTS, AND OTHER FEATURES WHICH HAVE BEEN PURCHASED BY THE OWNER TO BE INCORPORATED INTO THE FINAL FUNCTIONING OPERATION.

PROTECT THE PUBLIC AND PROPERTY FROM DAMAGE THROUGHOUT CONSTRUCTION.

PROPERLY DISCONNECT EXISTING UTILITIES WHICH ARE TO BE ABANDONED AND PLUG OR CAP AS REQUIRED BY CODE AND SOUND INDUSTRY PRACTICES.

CONTRACTOR(S) SHALL HOLD HARMLESS AND INDEMNIFY THE OWNER AND THE ARCHITECT FOR ANY AND ALL CLAIMS, LIABILITY, LOSS, DAMAGE, COSTS, EXPENSES (INCLUDING ATTORNEY'S FEES) AND INVESTIGATION / LITIGATION COSTS, AWARDS, AND FINES OR JUDGEMENTS IMPOSED BY LAW OR ARISING BY REASON OF THE DEATH OR BODILY INJURY TO PERSONS INCLUDING EMPLOYEES OF THE CONTRACTOR, PROPERTY INJURY, EQUIPMENT DAMAGE, AND MATERIAL DESTRUCTION FROM VIOLATIONS OF GOVERNMENT REGULATIONS OR CARELESSNESS IN IMPLEMENTING SOUND INDUSTRY PRACTICES AND CONSTRUCTION INTENT EXPRESSED IN THE WORKING DRAWINGS, SPECIFICATIONS, AND CONTRACTS.

CONTRACTOR(S) SHALL BE HELD RESPONSIBLE FOR ANY AND ALL EXPENSES INCURRED IN CONJUNCTION WITH TEARING OUT, REPAIRING, OR REPLACING THE WORK AS A RESULT OF DEFECTIVE LABOR, WORKMANSHIP, OR MATERIAL PERFORMANCE SUPPLIED BY THE GENERAL CONTRACTOR.

AS-BUILT DRAWINGS OF SITE IMPROVEMENTS ARE AVAILABLE FROM CITY PUBLIC WORKS

SECURITY REQUIREMENTS

1. In addition to specified glazing on drawings and schedules, the following glass must comply
   All glass w/ in 24" of a door — All glass w/ in 18" of a floor (greater than 9 s.f. in area)
   All glass w/ in 36" of finish grade. — All glass in doors.
2. Comply with Uniform Building Security Code sections 4106 thru 4109
3. When hinges are exposed to the exterior, at least one of the three required hinges shall be equipped w/ non-removable hinge pins or a mechanical inter-lock to preclude removal of the door from the exterior (by removing the hinge pins). Not less than three 4 1/2 inch steel butt hinges shall be symetrically fastened to both door and frame with not less than four #9 3/4" wood screws or to metal w/ not less than four #8 machine screws.
4. Single swinging doors and the active leaf of doors in pairs shall be equipped w/ an approved exterior key operated dead bolt which has been tested in accordance w/ UBC standard number 41-1, part 1.
5. Manually operated edge or surface mounted flush bolts and surface bolts are prohibited.

ENERGY CONSERVATION MEASURES

1. Caulk, gasket, weather-strip, and seal exterior joints at frames, wall sole plates, siding materials, openings for plumbing, openings for electrical, openings for gas lines and all holes.
2. Caulk at the following locations (not to be construed as complete)...
   Control joints in masonry surfaces (int. and ext.)
   Control joints in concrete surfaces
   Perimeter of door frames and window frames (int. and ext.)
   Perimeter of louvers and grilles (int. and ext.)
   Top edge of reglets and counter flashing assemblies
3. Provide expanding foam "Polycell One" at perimeters of all exterior sills, openings, and mechanical openings.
4. Base sill on slab shall have (be equal to) 6 mil Visqueen polyethelene film or "Nevastral" flashing.
5. Comply with minimal insulation indicated on sections and details.
   Typically use SPF R30 spray foam insulation in metal stud bays for both sound control and condition barrier.
6. All exterior doors shall limit air leakage around their perimeter when in a closed position.
   Provide seal or astragal at head, sill, and jambs.
   Doors mounted on the inside or outside of exterior walls shall have a standard lap at jambs
   Meeting portions of double doors shall be provided w/ a weathertight seal or astragal.
   Vertical guide track doors shall use a continuous mounting angle sealed to limit air leakage.
7. All openings (windows and doors) in exterior energy insulated walls shall be properly weatherstripped or gasketed to limit air infiltration.

GENERAL INTERIOR FINISHES

1. Gypsum board shall be installed in accordance with ASTM C754, GA203, & GA216. (Verify texture with finish schedule)
2. Insulation shall have a limited fire spread rating not to exceed 25 and a smoke density not to exceed 450 when tested in accordance w/ UBC standard #42-1.
3. All plumbing, electrical, and other lines shall be concealed w/ in the restroom to as great an extent as possible. At the observatory building, all runs shall be at least 1/2" away from the interior walls or ceiling and six to eight inches off the floor. Where conduit or pipes enter a wall, ceiling, or floor, the opening around the line shall be tightly sealed. Multiple runs or clusters of conduit or pipe lines shall be encased in an approved runway (easily openable approved sealed enclosure).
4. Foam plastics shall not be used as interior finish.
5. When gypsum is used as a base for tile or wall panels for water closet walls, water resistant gypsum backing board shall be used. (I.C.B.O. report # 1874)
   Water -resistant gypsum (green-board) shall not be used in the following areas...
   Over a vapor barrier
   In high humidity areas (such as suanas, steam rooms, etc.)
   On ceilings where framing spacing exceeds 12" o.c.

GENERAL EXTERIOR FINISHES

1. All exposed plumbing, ducts, equipment, and hardware under floors shall be painted flat black. Exposed ducts protruding from wall face to be painted flat black. Additionally, paint the underside of the raised ramp flat black.
2. Dip all galvanized wire mesh fencing and hardware in Nantina treatment (877-762-8462).

N O T E: A SEPARATE REVIEW MAY BE REQUIRED, APPROVAL AND PERMITS NECESSARY FOR GRADING, ACCESSORY BUILDINGS AND STRUCTURES, SIGNS, TRASH ENCLOSURES, BLOCK WALLS, RETAINING WALLS NOT SUPPORTING THE BUILDING, AND DEMOLITION WORK. CONTACT GOVERNING AUTHORITY FOR VERIFICATION AND PROCEDURES.

A SEPARATE PERMIT AND PLAN REVIEW MAY BE REQUIRED FOR EROSION AND SEDIMENT CONTROL FOR GRADING AND ANY OTHER SIGNIFICANT LAND DISTURBING ACTIVITY. VERIFY WITH GOVERNING AUTHORITY.

MANDATORY REQUIREMENTS INCLUDE THE APPLICANT'S RESPONSIBILITY TO PROOVE THE INSTALLATION OF STATE APPROVED OR LISTED FEATURES, DEVICES, AND EQUIPMENT AND TO COMPLY WITH APPLICABLE REGULATIONS.

CONSTRUCTION IS SUBJECT TO CONDITIONS AND RESTRICTIONS IMPOSED BY A LOCAL DESIGN REVIEW BOARD. NO CHANGES, ALTERATIONS, OMMISSIONS, ADDED FEATURES, OR ALTERNATE CONSTRUCTION WHICH ARE DIFFERENT THAN THE APPROVAED DESIGN REVIEW DRAWINGS SHALL BE MADE UNLESS SUBMITTED FOR APPROVAL. FAILURE TO RE-SUBMIT MAY RESULT IN A FINE. FUTURE INSTALLATION OF SOLAR PANELS, FENCES, EQUIPMENT, SATTELITE DISHES, ANTANAE, ETC. REQUIRES APPROVAL.

DRAWINGS COMPRISE ALL THE SHEETS WHICH ARE LISTED ON THE INDEX TO SHEETS (SHEET #1). THESES DRAWINGS ARE INSTRUMENTS OF SERVICE AND SHALL NOT BE USED IN PART OR REPRODUCED FOR ANOTHER PROJECT W/OUT WRITTEN PERMISSION FROM THIS ARCHITECT.

Narkweather ARCHITECTS INC.
73 330 HWY 111, SUITE A / PALM DESERT, CA 92260-4016
PHONE: (760) 346-4090 / E-MAIL: info@narkweather.net

OWNERSHIP OF DOCUMENTS
DRAWINGS AND SPECIFICATIONS AS INSTRUMENTS OF SERVICE ARE AND SHALL REMAIN THE PROPERTY OF THE DESIGNER WHETHER THE PROJECT FOR WHICH THEY WERE PREPARED IS EXECUTED OR NOT. THEY ARE NOT TO BE USED ON OTHER PROJECTS OR EXTENSIONS TO THIS PROJECT EXCEPT BY AGREEMENT IN WRITING AND WITH APPROPRIATE COMPENSATION TO Narkweather Architects Inc.
COPYRIGHT 2016 Narkweather Architects

CITY OF RANCHO MIRAGE
PROJECT DESCRIPTION: O B S E R V A T O R Y — Rancho Mirage Public Library
SITE ADDRESS: 71-100 California 111, Rancho Mirage, CA 92270

SHEET CONTENT: PROJECT NOTES

DRAWING SCALE:
SCALE: (NONE)

ISSUE DATE		
MONTH	DAY	YEAR
SEPT.	29	2016

REVISION 1 DATE:
REVISION 2 DATE:
REVISION DATE:
REVISION DATE:
REVISION DATE:

(PLAN CHECK ENGINEER STAMP)
RECOMMENDED FOR APPROVAL BY: LELAND E. COLE — 9/27/16 DATE
R.C.E. 47159 EXP. 12/31/17
APPROVED BY CITY OF RANCHO MIRAGE: WILLIAM A. ENOS, CITY ENGINEER R.C.E. 43910, EXP. 6/30/2017 — DATE

DRAWING NUMBER
T2
SHEET # 2 OF 56
PRIVATE REFERENCE #
CITY REFERENCE #

Bid Set - 10/07/2016

P R O J E C T K E Y N O T E S (APPLICABLE TO ALL ARCHITECTURAL DRAWINGS SHEETS)

01 MANUFACTURED 24 GA GALVALUME DOME ASSEMBLY. OBSERVATORY DOME AND TOILET DOME TO BE MANUFACTURED USING GALVALUME FINISH STEEL.

NOTE: ASH DOME MANUFACTURER PROVIDES TWO DRIVE MOTORS. CANADIAN STANDARDS ASSOCIATION NUMBER 42492.

02 FIELD MADE DECORATIVE STUCCO PANEL ASSEMBLIES ON 1" THICK POLYSTYRENE INSULATION PER WALL SECTION DETAILS. (SUBMIT 3 SAMPLES MATCHING SIMULATED LIMESTONE AT LIBRARY)

03 NATURAL CONCRETE (SNAP TIES BROKEN OFF W/ HOLES TO REMAIN) 1 X 6 RO/S BOARD FORMS

04 BACK SIDE OF WALL AND WALLS FACING INTO EXHIBIT AREA TO BE VENEERED WITH NOMINAL 1/2" IPE WOOD LAID HORIZONTALLY

05 CONCRETE WALK TO LIBRARY BUILDING PER CIVIL DRAWINGS

NOTE: ALL CONCRETE WALKWAYS AND EXTERIOR SLABS ARE TO BE FINISHED IN NATINA PRODUCT. GENERAL BUILDING CONTRACTOR MUST POUR FIVE (5) VARIOUS SAMPLE PADS MEASURING 24" X 24" (MIN.) FOR ARCHITECT'S SELECTION AND TESTING APPROVAL(S).

06 STEEL BAR PICKETS AT 5 INCHES AT GATES AND FENCE ASSEMBLIES.

07 GRAB BARS INSTALLED PER CBC ACCESSIBILITY STANDARDS

08 ACCESSIBLE WATER CLOSET

09 HANDRAIL MOUNTED ON INSIDE FACE OF TUBE STEEL (1.5" DIA.) (MIL FINISHED ALUMINUM).

10 5050 (50 mm X 5.0 mm) CONTINUOUS LED 110–120V W.P. STRIP LT.

11 4 FT. CLEAR WIDE LOCKABLE STEEL GATE WITH EXIT PANIC BAR
NOTE: METAL GRATE TO BE WELDED AT INSIDE TO PREVENT REACHING IN AND ACTIVATING OPENING HARDWARE.

12 RAMP DECK SLOPED AT 1:12 (MAX.) W/ NOMINAL 3 INCH THICK NON–SLIP BROOM FINISH TEXTURED AND STAINED CONCRETE

13 IPE WOOD DECKING INSTALLED ON DeckWise JOIST TAPE (TYPICAL).
NOTE: OIL FOUR SIDES AND WAX ENDS – INSTALL 16 PENNY NAIL SPACING BETWEEN BOARDS.

14 ISOLATED 6 FT. SQUARE DISPLAY PADS TO BE NON–COLORED CONCRETE LAID FLUSH WITH WALKING SURFACE (NOTE: SURFACE TO BE NON–SLIP BROOM FINISH AND LEVEL).

15 BOTTLE FILLER AND ADA D.F. (ELKAY EZH20LK4420BFIUDB).

16 LINE OF ROOF ASSEMBLY PROJECTION

17 48 INCHES DIAMETER CONCRETE PEDESTAL FOR TELESCOPE MOUNT

18 MANUFACTURED DOME ASSEMBLY (ASHDOME)

19 (20 ga GALV. A606–4 COR–TEN FINISH): 7/8" CORRUGATED PANELS HORIZONTAL STAGGERED INSTALLED WALL VENEER (ROLLED FOR RADIUS) INSTALL OVER 2 LAYERS TYPE 'D' PAPER OVER 3/8" SUBSTRATE.

20 3" DIA. & 4" DIA. RIGID CONDUIT FOR ELECTRIC / CABLE INSTALLATION FOR INSTRUMENT CONTROLS / ACTIVATION

21 PRIMARY AND OVERFLOW ROOF DRAIN (3 INCH DIA.) WITH A.B.S. DRAIN PIPES. NOTE: INSTALL 4 INCH DIAMETER C.I. SLEEVE IN CONCRETE STEM AND FOOTING TO RUN THE DRAINS BELOW FINISH GRADE AND SPILL AT CURB FACE AND AS INDICATED.

22 GROUND RODS (GROUND PLATE) LOCATED A MINIMUM 24 INCHES FROM BUILDING WALL W/ TOP BURIED BELOW GRADE (2 FT. MIN.) ELECTRIC SERVICE GROUND MUST BE CONNECTED AS RECOMMENDED BY DOME MANUFACTURER. BARE COPPER SHOULD NOT COME IN CONTACT WITH GALVANIZED OR ALUMINUM. INSTALL ELECTRONIC SURGE ARRESTER ON EQUIPMENT TO PREVENT SURGES ENTERING THROUGH UTILITY WIRING. INSTALLATION MUST MEET UL AND NFPA INSTRUCTIONS.

GENERAL CONTRACTOR TO SUBMIT SHOP DRAWINGS FOR REVIEW. COMPLY WITH THE DOME MANUFACTURER'S RECOMMENDATIONS FOR PROPER GROUNDING OF DOME AND SENSITIVE EQUIPMENT FOR LIGHTNING PROTECTION. (NOTE: 4 LOCATIONS ARE SHOWN ON THE BASEMENT PLAN).

23 DAYTON INTAKE LOUVER –FIXED, DRAINABLE WITH BIRD SCREEN 24 H X 48 W MODEL NUMBER 20UA65

24 CONTINUOUS CANT STRIP ASSEMBLY W/ INTEGRAL METAL ROOF FLASHING

25 WALL VENEER ASSEMBLY PER DETAIL 11, SHEET A4.5.

26 INTEGRAL GAVALUME 20 GAUGE METAL WALL CAP ASSEMBLY LAP

27 POLISHED NATINA CONCRETE FLOOR SLAB (SLOPE SLIGHTLY TO FLOOR DRAIN WHERE OCCURS)

28 4 X 4 TUBE STEEL VERTICALS WITH 3/16 INCH STAINLESS STEEL WIRES MATCHING SLOPE OF HANDRAIL SPACED 3 INCHES O.C.

29 ROOFING TO BE GALVANIZED STEEL: 7/8" CORRUGATED PANELS INSTALLED OVER 30 POUND FELT

30 FLOOR DRAIN PER PLUMBING PLANS AND DETAILS

31 BOLLARDS CONSTRUCTED USING SITU CONCRETE WITH SNAP TIES BROKEN OFF AND NOT FILLED (CONE SHAPE INDENT).

32 3/16" STAINLESS STEEL WIRE CABLE WITH TENSION BOLT AT END CONNECTION(S). PERIODIC TIGHTEN UNTIL FULLY SET.

33 5 X 1.5 TUBE STEEL CURVED ROLLED AND FIELD WELDED TO TUBE STEEL VERTICALS

34 METAL HANDRAILS ARE TO COMPLY WITH T24 ACCESSIBILITY STANDARDS, DETAILS, AND CODES. THE GENERAL CONTRACTOR SHALL SUBMIT SHOP DRAWINGS OF ATTACHMENT HARDWARE WITH MOUNTING HEIGHTS, AND CONFIGURATIONS FOR REVIEW.

35 CONTINUOUS GALVANIZED ROLLED CHANNEL KICK PLATE SET ON RAMP DECK AND WELDED TO VERTICALS W/ LITE STRIP POCKET PER DETAIL 1, SHEET A3.2

36 OMIT: (DELETE EXIT CONTROL BUTTON)

37 (NOTE: ROOF DRAIN DISCHARGE TO BE BELOW GRADE ONLY) RUN TO CURB OUTLET AT PARKING AREA

38 GALVANIZED 2x2 C.L. FENCING BETWEEN DECK & FLOOR AND FINISH GRADE WITH ONE C.L. LOCKABLE GATE ACCESS SUBMIT SHOP DRAWINGS FOR REVIEW.

NOTE: USE STANDARD "CHAIN–LINK" HARDWARE AND FENCING.

39 FORMED CHAMFER EDGE AT CONCRETE PEDESTAL TOP (1.5 INCH RAD.)

40 1 5/8" WIDE X 3/8" DEEP X 8 FT. LONG EL DORADO BATTEN (DUPONT RAINVENT BATTEN – FLUSH–HEAD SCREWS TO STUD) OVER 30 POUND FELT AT EACH STUD LOCATION. (WHERE CORRUGATED COR–TEN SIDING OCCURS)

41 SCAFCO PERFECT 18 GA. CURVED WALL TRACK (7.5" WIDE X 1.5")

42 DOWNSPOUT DISCHARGE TO BE 2 INCHES ABOVE 1 FT. X 2 FT. X 4 INCH CONCRETE SPLASH BLOCK AT GRADE.

43 CURVED ROLLED 8x2 TS FIELD WELD TO STEEL COLUMNS RADIUS AT OUTSIDE FACE TO BE 11'–1" EXACTLY. SECURE TO EACH STUD WITH ANGLE CLIP AND SCREWS

44 O M I T

45 1 1/8" NOMINAL CDX T&G PLYWOOD FLOOR DECK GLUE ALL JOINTS AND SCREW TO FRAMING JOISTS

46 POLISHED CONCRETE FLOOR AT BASEMENT

47 SPF OPEN CELL INSULATION IN STUD, RAFTER, AND FLOOR BAY

48 6" STEEL STUDS SPACED 12" O.C. AT DOME

49 3 COAT 7/8" STUCCO ASSEMBLY OVER (2) LAYERS OF TYPE 'D' BUILDING PAPER OVER SUBSTRATE

50 26 GA. G.I. WEEP SCREED ASSEMBLY (CUSTOMIZED FOR RADIUS CURVE AS REQUIRED) WITH DRAINAGE HOLES (SEAL EDGE BUG–TIGHT) W/ ONE INCH LAP SCREED FLANGE REGARDLESS OF SCREED TYPE W/ 4 INCH CLEARANCE TO FIN. GRADE AND 2 INCH CLEAR TO CONCRETE FTG., DECK OR SLAB.

51 T.S. COLUMN INSTALLED IN COMPLIANCE WITH STRUCTURAL DRAWINGS. CENTER OF COLUMN TO ALIGN DIMENSIONALLY WITH THE TOP T.S. DOME & ANCHOR CIRCLE.

52 NOMINAL 4 INCH CONCRETE SLAB INSTALLED OVER 6 MIL VISQUEEN OVER 4 INCH AGGREGATE BASE COURSE.

53 SHOT ANCHORS AT CLIP ANGLE CONNECTION TO CONCRETE AT 48 INCHES MAX. O.C.

54 FINISH GRADE PER GRADING PLANS (VERIFY)

55 NATURAL GRADE LINE PER GRADING PLAN (VERIFY)

56 RADIANT BARRIER (ON UNDERSIDE OF CDX SHTG.)

57 FLOOR FRAMING PER STRUCTURAL DRAWINGS AND DETAILS

58 DIAMOND PLATE METAL METALLIC GALV. MTL. FLOOR FLAT–HEAD FLUSH SCREW ATTACHMENT

59 LAMINATED PLASTIC FACE (WILSON ART) 3/8" MIN. CDX PLY OR OSB BACKING REQUIRED

60 TELESCOPE EYE–PIECE INSTALLED AT EXACT HEIGHT PER MANUFACTURER'S PRINTED INSTRUCTIONS.

61 CONTINUOUS 3 INCH WIDE VENT SCREED ASSEMBLY

62 CUSTOM FABRICATED GALV. FORMED REVEAL CHANNEL 2" DEEP X 1" WIDE – CONTINUOUS PER DTL. 8/A4.4

63 INTEGRAL METAL COPING CAP WITH CLEAT

64 LIGHT GAUGE STEEL RAFTERS PER STRUCTURAL DRAWINGS

65 LIGHT GAUGE STEEL STUD FRAMING PER STRUCTURAL

66 CONTINUOUS COPPER FLASHING CAP PER DETAILS

67 FIELD VERIFY SHUTTER OPENING MECHANISM OF DOME AND ADJUST TO CLEAR ROOFING BY 3 INCHES MINIMUM.
NOTE: CHECK ALL CLEARANCES INCLUDING WEATHER STATION.

68 GUTTER AND DOWNSPOUT PER DETAIL 5 AND 10, SHEET A5.2

69 HOSE BIBB BOX (FLUSH IN WALL) BACK FLOW PREVENTER

70 AUTOMATIC TYPE LOUVER–VENTS ARE TO BE INSTALLED FLUSH IN FLOOR PER MECHANICAL PLAN AND DETAILS.

71 INSTALL MECHANICAL EQUIPMENT ON LEVEL CONCRETE SLAB (NOMINAL 4 INCHES THICK ON 4" A.B.C.)

72 OMIT: (NOTE: NO ROOF RODS)

73 3.5" STUDS AT 12" O.C.

74 60 X 24 LOUVER ASSEMBLY PER DTL 1/A2.3

75 ATTACH BOTTOM TRACK TO SLAB WITH DRIVEN ANCHORS @ 24" O.C. FASTEN CHANNEL RUNNER TO VERTICAL STUD W/ SHEET METAL

76 L.E.D. LIGHTS MOUNTED ON CEILING PER ELECTRICAL PLANS

77 COOL ROOF PER DETAILS ON SHEET G4.0 (METAL AND B.U. ROOF ASSEMBLIES)

78 20 GAUGE G–40 GALVANEAL GALVALUME PLUS

79 WATER SPRINKLER (FOR ROOF COOLING) WITH VALVE CONTROL INSIDE THE COSMIC OFFICE ADJACENT TO WASH UP SINK

80 SHAPED 3 X CAP (radius cut) W/ 1/2" DIA. A.B. AT 16" O.C. INSTALL RADIUS BENT COPPER CAP FLASHING AND RADIUS CLEAT

81 MECHANICAL EQUIPMENT MOUNTED ON CONCRETE SLAB PAD (SEE MECHANICAL PLANS)

82 14 x 14 SUPPLY GRILLE PER MECHANICAL PLAN

83 ISOLATED FOOTING (TOP FLUSH WITH FLOOR SLAB) PROVIDE 1 INCH (MIN.) SEPARATION STYROFOAM INSULATION TO DEPTH OF 48 INCHES AND SEALED AT TOP.

84 FRAME VERTICAL SOFFIT TO 8'–0" A.F.F. AT WALL MOUNTED A.C. UNIT

85 CONCRETE PIERS AND CAISSONS PER STRUCTURAL PLANS

86 SUB–SURFACE EXHAUST DUCT PER MECH PLANS.

87 METAL ACCESS GATE PER DETAIL

88 MECHANICAL EQUIPMENT IN ATTIC PER MECHANICAL PLANS

89 PROVIDE SILL GASKET UNDER BOTTOM TRACK SET IN SEALANT

90 BOLTWOOD CLOUD SENSOR II. MOUNT ASSEMBLY AT TOP OF ROOF AT OBSERVATORY VESTIBULE. PROVIDE (2) MONITOR WIRELESS WEATHER STATIONS. LOCATE WITHIN 12 INCHES OF THE LOWER ROOF CORNER.

91 FIRE EXTINGUISHER LOCATION. MOUNT AT 48 INCHES A.F.F. TO CENTER LINE. SIZE: 2A–10BC – BRACKET MOUNTED

92 NOMINAL 4 INCH CONCRETE SLAB (SLOPED TO DRAIN) 1/4" PER FT MAX AND 1/8" PER FT MIN

NOTE: ALL CONCRETE WALKWAYS AND EXTERIOR SLABS ARE TO BE FINISHED IN NATINA PRODUCT. GENERAL BUILDING CONTRACTOR MUST POUR FIVE (5) VARIOUS SAMPLE PADS MEASURING 24" X 24" (MIN.) FOR ARCHITECT'S SELECTION AND TESTING APPROVAL(S).

93 PROVIDE INTERCOM SYSTEM (SUBMIT SHOP DRAWINGS FOR REVIEW AND APPROVAL PRIOR TO INSTALLATION).
RANDY VIEGAS AT PUBLIC WORKS HAS CITY SUPPLIED EQUIPMENT.
SECURITY EQUIPMENT IS SUPPLIED BY CITY AND INSTALLED BY G.C.

94 SEE DETAIL 'B' ON THIS SHEET FOR MODIFICATIONS REQUIRED FOR EXISTING TRANSFORMER ENCLOSURE ASSEMBLY (UNDER CARPORT)

95 OBSERVATORY WALLS ARE TO BE FINISHED WITH WILSON ART (BATTLE BOT) ON 3/8" SUBSTRATE 4 X 10 SHEETS LAID VERTICALLY

96 PROVIDE NOMINAL 2 INCH THICK ISOLATION STYROFOAM INSULATION BETWEEN FOUNDATION FOOTINGS

97 PROVIDE NOMINAL 2 INCH THICK ISOLATION STYROFOAM INSULATION BETWEEN WALLS. CAULK AND SEAL BUG TIGHT FULL HEIGHT AND PAINT FLAT BLACK.

98 INSTALL 18"x18" BLACK AND 18"x18" WHITE VINYL TILE AND 6 INCH BLACK RUBBER BASE AT COSMIC OFFICE INTERIOR. LAY TILE FLOOR IN CHECKERBOARD PATTERN.

99 INSTALL COR–TEN (20 GA) FORMED WALL BASE FLASHING ALONG THE BASE PLATE (11/A4.5) VENEERED WITH COR–TEN CORRUGATED PANELS. BASE FLASHING TO PROJECT BEYOND THE STEEL COLUMN CONCRETE BASE ASSEMBLY.

Narkweather ARCHITECTS INC.
73 330 HWY 111, SUITE A / PALM DESERT, CA 92260–4016
PHONE: (760) 346–4090 / E–MAIL: info@narkweather.net

OWNERSHIP OF DOCUMENTS
DRAWINGS AND SPECIFICATIONS AS INSTRUMENTS OF SERVICE ARE AND SHALL REMAIN THE PROPERTY OF THE DESIGNER WHETHER THE PROJECT FOR WHICH THEY WERE PREPARED IS EXECUTED OR NOT. THEY ARE NOT TO BE USED ON OTHER PROJECTS OR EXTENSIONS TO THIS PROJECT EXCEPT BY AGREEMENT IN WRITING AND WITH APPROPRIATE COMPENSATION TO Narkweather Architects Inc.
COPYRIGHT 2016 Narkweather Architects

CITY OF RANCHO MIRAGE
OBSERVATORY
PROJECT DESCRIPTION: Rancho Mirage Public Library
SITE ADDRESS: 71–100 California 111, Rancho Mirage, CA 92270

SHEET CONTENT
PROJECT KEY NOTES

DRAWING SCALE:
SCALE: (NONE)

ISSUE DATE		
MONTH	DAY	YEAR
SEPT	29	2016

1	REVISION DATE:
2	REVISION DATE:
3	REVISION DATE:
	REVISION DATE:
	REVISION DATE:

(FOR CHECK ENGINEER STAMP)
RECOMMENDED FOR APPROVAL BY:
LELAND E. COLE 9/27/16 DATE
R.C.E. 47159 EXP. 12/31/17
APPROVED BY CITY OF RANCHO MIRAGE:
WILLIAM A. ZINOS, CITY ENGINEER DATE
R.C.E. 43915 EXP. 6/30/2017

DRAWING NUMBER
T3
SHEET # 3 OF 56
PRIVATE REFERENCE #
CITY REFERENCE #

Bid Set - 10/07/2016

SEISMIC ANCHORAGE FOR BOTH MANUFACTURED DOMES ARE CONSIDERED A DEFERRED SUBMITTAL. THE GENERAL CONTRACTOR SHALL SUBMIT SHOP DRAWINGS AND CALCULATIONS BY STATE LICENSED STRUCTURAL ENGINEER FOR DOME ANCHORAGE.

OPEN DECK (RAMP) AS SHOWN ADJACENT TO P.L. HAS BEEN APPROVED BY THE CITY BUILDING OFFICIAL

FIRE RESISTIVE WALL IS NEEDED (VB CONSTRUCTION) AND REQUIRED BY THE CITY BUILDING OFFICIAL.

FREE-STANDING RAMP CONSTRUCTION IS REQUIRED TO BE ENTIRELY NON-COMBUSTIBLE MATERIALS. CONCRETE WEAR SURFACE TO BE SLIP-RESISTANT BROOM FINISH.

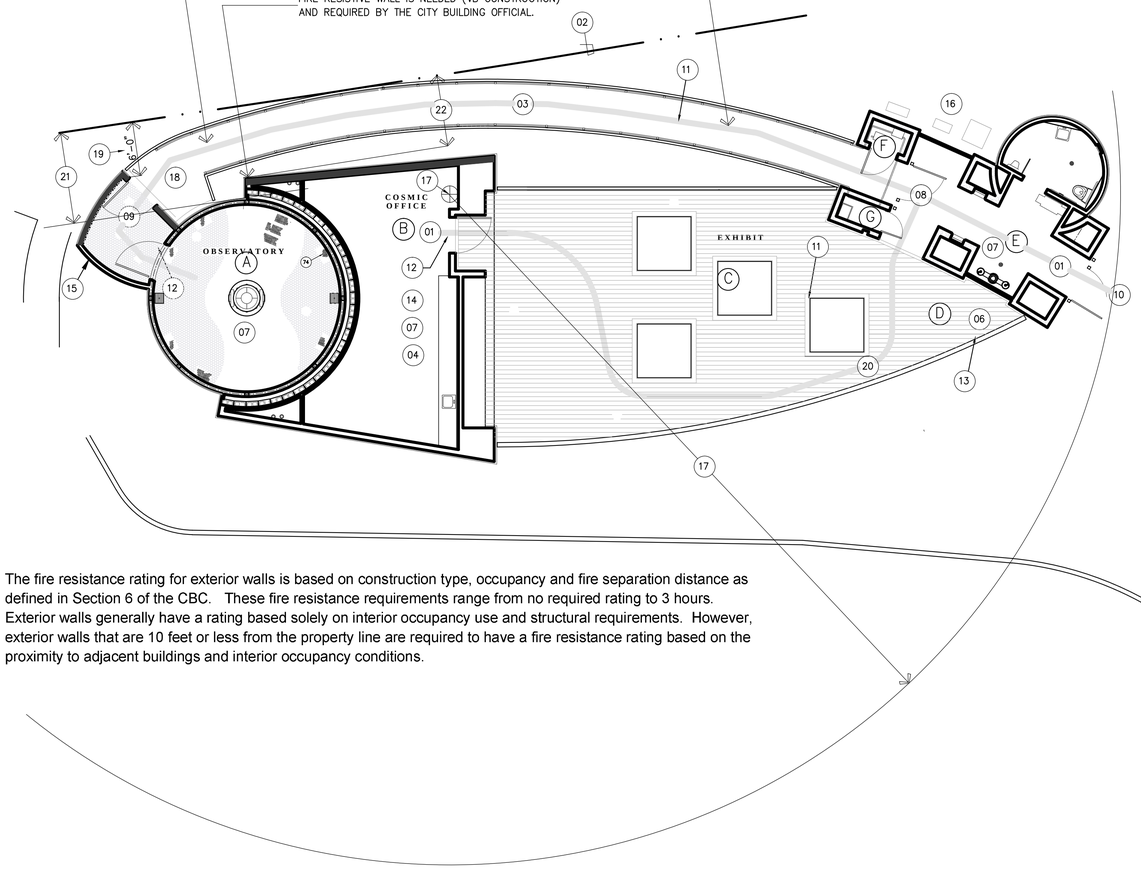

The fire resistance rating for exterior walls is based on construction type, occupancy and fire separation distance as defined in Section 6 of the CBC. These fire resistance requirements range from no required rating to 3 hours. Exterior walls generally have a rating based solely on interior occupancy use and structural requirements. However, exterior walls that are 10 feet or less from the property line are required to have a fire resistance rating based on the proximity to adjacent buildings and interior occupancy conditions.

BUILDING AREA	CONDITIONED: 950 SQ. FT. UN-CONDITIONED: 30 SQ. FT. BASEMENT: 350 SQ. FT.	1,330 SQ. FT. NET 1,400 SQ. FT. GROSS
	OUTDOOR DISPLAY: 1,000 SQ. FT. DISPLAY PADS 64 SQ. FT. EGRESS RAMP 486 SQ. FT. ROUTE CIRCULATION: 220 SQ. FT.	1,550 SQ. FT. GROSS ELEVATED FLOOR CONCRETE SLAB
OCCUPANCY	B (BUSINESS TYPE) NOTE: ASSEMBLY LESS THAN 50 U (MISC. ACCESSORY) NOTE: THE CITY BUILDING OFFICIAL ALLOWS LOCATION OF FREE STANDING EXIT RAMP ADJACENT TO P.L. IF CONSTRUCTED OF NON-COMBUSTIBLE MATERIALS	
CONST. TYPE	TYPE V-B AREA ALLOWED 9.000 SQ. FT. > 1,400 GROSS S.F. HEIGHT ALLOWED 40 FT. > 30 FT.	
HAZARDOUS	NO HAZARDOUS MATERIALS WILL BE STORED AND/OR USED W/IN THE BUILDING OR PREMISES WHICH EXCEED THE QUANTITIES LISTED IN CBC T-307.A(1) AND T-307.2(2).	
	DEPICTS ONE-HOUR RATED WALL ASSEMBLY FROM FOUNDATION STEM WALL OR WALL BASE UP TO THE ROOF ASSEMBLY (ALL NON-COMBUSTIBLE MATERIALS). SEE COMPLIANT PLAN DETAIL BELOW.	

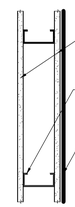

5/8" SHEETROCK FIRECODE CORE GYPSUM PANELS, OR 5/8" SHEETROCK ULTRALIGHT FIRECODE X PANELS OR 5/8" FIREROCK PANELS

3 1/2" (MIN.) OR AS DESCRIBED ON WALL SECTIONS 25 GAUGE (MAX.) STEEL STUDS AT 24" MAX. O.C. (THE MINIMUM REQUIRED ASSEMBLY MEMBERS)

SEE WALL SECTION DETAILS FOR VENEER REQUIREMENTS

ASSEMBLY COMPLIES WITH UL Des U419

ONE-HOUR WALL ASSEMBLY

N.T.S.

1 / T4

OCCUPANT LOAD CALCULATIONS

SPACE I.D.	OCCUPANCY DESCRIPTION	CBC SECTION	S.F. AREA	LOAD FACTOR	TOTAL OCC.	COMMENTARY
A	ACCESSORY EQUIPMENT	TABLE 1004.1.2	350	1/300	1	
B	BUSINESS AREA	TABLE 1004.1.2	530	1/100	5	
C	OUTDOOR EXHIBITS	TABLE 1004.1.2	1000	1/30	34	1004.5 ASSIGNED BY BLDG. OFFICIAL
D	TOILET RESTROOM	NOT APPLY	70	2 MAX	2	
E	OUTDOOR ACCESS RT.	NOT APPLY	NA	NA	NA	1004.5 EXCEPTION NUMBER 1
F	ACC. STOR. EQUIPMENT	TABLE 1004.1.2	15	1/300	NA	
G	ACC. STOR. EQUIPMENT	TABLE 1004.1.2	15	1/300	NA	
					42	1021.2-1&2 NUMBER 1

01 1021.2: SINGLE EXIT IS PERMITTED SINCE THE TRAVEL DISTANCE DOES NOT EXCEED... TABLE 1021.2(2)
LESS THAN 49 OCCUPANTS (A AND B OCCUPANCY)
100 FEET MAXIMUM TRAVEL DISTANCE (TO GRADE LEVEL) W/ FIRE SPRINKLERS

02 THE PROPERTY LINE SEPARATES THE CITY LIBRARY AND WATER DISTRICT DRAINAGE COURSE R.O.W.. THE CITY BUILDING OFFICIAL HAS MADE A JUDGEMENT DECISION EXEMPTING CERTAIN STATE BUILDING CODE PROVISIONS RELATIVE TO THE PROXIMITY TO THE PROPERTY LINE. THE FREE STANDING RAMP MUST BE NON-. COMBUSTIBLE AND FIRE WALLS ARE NECESSARY.
(10 FEET OR LESS TO PROPERTY LINE)

03 BALCONIES FOR EGRESS TO COMPLY WITH CBC 1019.2

04 WALL, FLOOR AND CEILING FINISHES MUST NOT EXCEED THE FLAME SPREAD CLASSIFICATIONS IN CBC T-803.9

05 THERMAL AND ACOUSTICAL INSULATION MUST COMPLY WITH CBC 719

06 INTERIOR FLOOR FINISHES AND FLOOR COVERING MATERIALS MUST COMPLY WITH CBC 804.2 THROUGH 804.4.1

07 CBC 903.2.11.1 EXEMPTS FIRE SPRINKLERS WHERE FLOOR AREA IS LESS THAN 1,500 SQ. FT. MORE THAN 20 S.F. OF OPENING IS SHOWN. PROVIDE DEFERRED SUBMITTAL FOR CUSTOM HALON SYSTEM FOR OBSERVATORY, BASEMENT, AND COSMIC OFFICE.

08 EXITING PLAN (SHOWN BY HEAVY HIDDEN LINE) COMPLIES WITH ALL EGRESS FEATURES INCLUDING COMMON PATH OF ACCESSIBLE TRAVEL, REQUIRED EXITS, OCCUPANT LOADS, REQUIRED WIDTHS, AND DISTANCES.

09 NUMBER OF EXITS FROM A STORY COMPLIES WITH T-1021.1 AND T-1021.2 BASED ON OCCUPANT LOAD AND TRAVEL PATH PER CBC 1021.1 AND 1021.2. THE TRAVEL DISTANCE COMPLIES W/ CBC T-1016.1. COMMON EGRESS PATH COMPLIES W/ CBC 1014.3

10 ACCESS ROUTE IS PLANNED CONNECTING TO LIBRARY ENTRANCE

11 EGRESS SYSTEM TO BE ILLUMINATED WITH AT LEAST ONE FOOT CANDLE AT THE FLOOR LEVEL (CBC 1006.2)

12 EXIT SIGNS TO BE ILLUMINATED W/ A SEPARATE POWER SOURCE (CBC 1011.5.3) AND ALSO PROVIDE TACTILE EXISTING SIGNS PER CBC 1011.3.

13 PUBLIC TOILETS SHALL BE PROVIDED WITH A MECHANICAL EXHAUST SYSTEM CAPABLE OF PROVIDING 50 CFM PER EA. WATER CLOSET AND URINAL AND 70 CFM FOR HEAVY USE (CMC T-4-4)

14 ROOF SLOPE CRITERIA COMPLIES WITH CBC 1507.10.1
ROOF AND OVERFLOW DRAINS ARE IN ACCORDANCE W/ CHAPTER 11 OF THE CPC (CBC 1503.4) W/ RAIN INTENSITY OF 3 INCHES PER HOUR.

15 ACCESS TO MECHANICAL APPLIANCES IN UNDER-FLOOR AREAS, IN ATTIC SPACES, AND ON ROOFS OR ELEVATED STRUCTURES SHALL BE IN ACCORDANCE WITH THE CMC AND CBC 1209.3.

16 ACCESS TO GROUND MOUNTED MECHANICAL EQUIPMENT IS REQUIRED. PROVIDE PATHWAY AND STEPPING STONES AS REQUIRED BUT DO NOT DISTURB LANDSCAPING.

17 FIRE EXTINGUISHER (SIZE: 2A-10BC) MAXIMUM 75 FEET TRAVEL DISTANCE (AS INDICATED)

18 PROVIDE LEVEL LANDING AT VESTIBLE ENTRANCE TO OBSERVATORY

19 DOOR IS GREATER THAN 5 FEET FROM P.L. (OK PER CITY B&S)

NOTE: THE CITY BUILDING OFFICIAL REQUIRES THE WALL AND DOOR ASSEMBLY TO BE FIRE RATED.

20 ISOLATED EQUIPMENT PLATFORMS ARE INSTALLED FLUSH WITH DECKING. THUS THERE IS A MINIMUM 48 INCH EXITING CLEARANCE AVAILABLE AROUND ANY FIXED TELESCOPIC EQUIPMENT.

21 THE DISTANCE FROM THE PROPERTY LINE TO THE PERIMETER WALL OF THE OBSERVATORY ROOM IS 10'-2" AND BECAUSE THE WALL IS MORE THAN 10 FEET, THE FIRE RESISTANCE RATING FOR EXTERIOR WALL IS NOT APPLICABLE; MORE THAN 10 FEET. (CBC TABLE 602)

22 THE DISTANCE FROM THE PROPERTY LINE TO THE EXTERIOR WALL OF THE COSMIC OFFICE IS APPROXIMATELY 8 FEET. A FIRE RATED ASSEMBLY IS THUS REQUIRED FULL LENGTH.

Narkweather ARCHITECTS INC.
73 330 HWY 111, SUITE A / PALM DESERT, CA 92260-4016
PHONE: (760) 340-4090 / E-MAIL: info@narkweather.net

OWNERSHIP OF DOCUMENTS
DRAWINGS AND SPECIFICATIONS AS INSTRUMENTS OF SERVICE ARE AND SHALL REMAIN THE PROPERTY OF THE DESIGNER WHETHER THE PROJECT FOR WHICH THEY WERE PREPARED IS EXECUTED OR NOT. THEY ARE NOT TO BE USED ON OTHER PROJECTS OR EXTENSIONS TO THIS PROJECT EXCEPT BY AGREEMENT IN WRITING AND WITH APPROPRIATE COMPENSATION TO Narkweather Architects Inc.
COPYRIGHT 2016 Narkweather Architects

CITY OF RANCHO MIRAGE
OBSERVATORY
PROJECT DESCRIPTION: Rancho Mirage Public Library
SITE ADDRESS: 71-100 California 111, Rancho Mirage, CA 92270

SHEET CONTENT
PROJECT code analysis

DRAWING SCALE: NONE

ISSUE DATE		
MONTH	DAY	YEAR
SEPT.	29	2016

1	REVISION DATE:
2	REVISION DATE:
	REVISION DATE:
	REVISION DATE:
	REVISION DATE:

(PLAN CHECK ENGINEER STAMP)
RECOMMENDED FOR APPROVAL BY:
LELAND E. COLE
R.C.E. 47159 EXP. 12/31/17
9/27/16 DATE
APPROVED BY CITY OF RANCHO MIRAGE:
WILLIAM A. EVANS, CITY ENGINEER
R.C.E. 36176, EXP. 12/31/17
DATE

DRAWING NUMBER
T4
SHEET # 4 OF 56
PRIVATE REFERENCE #
CITY REFERENCE #

Bid Set - 10/07/2016

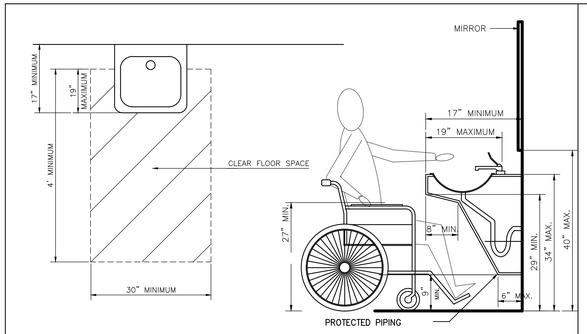

HOT WATER AND DRAIN PIPES UNDER THE LAVATORY SHALL BE INSULATED OR CONFIGURED TO PROTECT AGAINST CONTACT. THERE SHALL BE NO SHARP OR ABRASIVE SURFACES UNDER LAVATORY.

FAUCETS SHALL BE LEVER OPERATED, PUSH TYPE, OR ELECTRICALLY CONTROLLED MECHANISMS. SELF-CLOSING VALVES SHALL REMAIN OPEN FOR AT LEAST 10 SECONDS.

MIRRORS SHALL BE MOUNTED WITH THE BOTTOM EDGE OF THE REFLECTING SURFACE NO HIGHER THAN 40 INCHES ABOVE THE FINISH FLOOR.

LAVATORY CLEARANCES 01
SCALE: N.T.S.

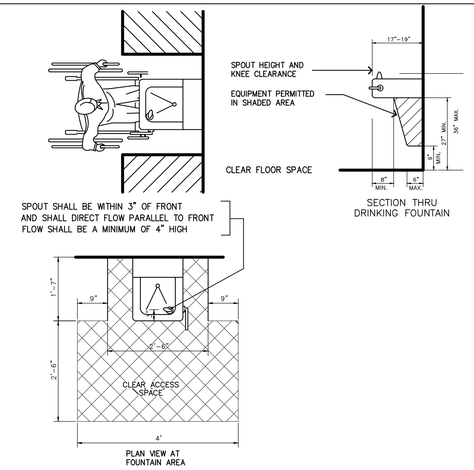

DRINKING FOUNTAIN CLEARANCES 02
SCALE: N.T.S.

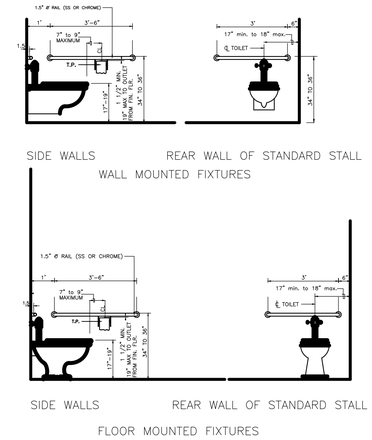

WATER CLOSET CLEARANCES 03
SCALE: N.T.S.

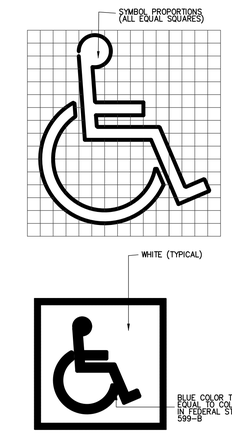

THIS INTERNATIONAL SYMBOL OF ACCESSIBILITY IS USED TO IDENTIFY ACCESSIBLE FACILITIES.

FACILITIES AND ELEMENTS REQUIRED TO BE IDENTIFIED AS ACCESSIBLE SHALL USE THIS INTERNATIONAL SYMBOL OF ACCESSIBILITY.

THE SYMBOL SHALL CONSIST OF A WHITE FIGURE ON A BLUE BACKGROUND. THE BLUE SHALL BE EQUAL TO COLOR NO. 15090 IN FEDERAL STD. NO. 595a. THE APPROPRIATE ENFORCEMENT AGENCY MAY APPROVE SPECIAL SIGNS AND IDENTIFICATION NECESSARY TO COMPLIMENT THE PREVAILING DECOR OR UNIQUE DESIGN WHEN IT IS DETERMINED THAT SUCH SIGNS AND IDENTI-FICATION PROVIDES ADEQUATE DIRECTION TO HANDICAP PERSONS. CONTRAST SHALL BE EITHER LIGHT CHARACTERS ON A DARK BACKGROUND OR DARK CHARACTER ON A LIGHT BACKGROUND.

CHARACTER SHALL BE RAISED WHERE USED FOR THE VISUALLY IMPARED A MINIMUM OF 5/8 INCHES OR RECESSED A MINIMUM OF 1/4".

ALL BUILDING ENTRANCES THAT ARE ACCESSIBLE TO A USABLE BY PHYSICALLY HANDICAPPED SHALL BE IDENTIFIED WITH AT LEAST ONE STD. SIGN AND WITH ADDITIONAL DIRECTIONAL SIGNS AS REQUIRED, TO BE VISIBLE TO PERSONS ALONG APPROACHING PEDESTRIAN WAYS.

THE U.B.C. REQUIRES THIS SYMBOL AT THE FOLLOWING LOCATIONS.....

ACCESSIBLE PARKING SPACES
ACCESSIBLE AREAS OF REFUGE
ACCESSIBLE PASSENGER LOADING ZONES
ACCESSIBLE TOILET AND BATHING FACILITIES
(IN ADDITION TO DOOR SYMBOLS)

ACCESSIBLE SYMBOL DETAIL 04
SCALE: N.T.S.

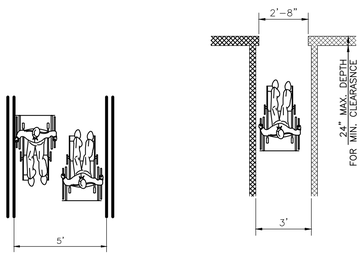

MINIMUM CLEAR WIDTH FOR TWO WHEELCHAIRS

MINIMUM CLEAR WIDTH FOR SINGLE WHEELCHAIR (INTERIOR SPACE ONLY)

IF AN ACCESSIBLE ROUTE HAS LESS THAN 60 INCHE CLEAR WIDTH, THAN PASSING SPACES AT LEAST 60" X 60" SHALL BE LOCATED AT REASONABLE INTERVALS NOT TO EXCEED 200 FEET. A "T" INTERSECTION OF TWO CORRIDORS OR WALKS IS AN ACCEPTABLE PASSING PLACE.

DOORS SHALL BE IN COMPLIANCE AS DEPICTED AND NOTED ON THE FLOOR PLANS.

WHEEL CHAIR CLEARANCES 05
SCALE: N.T.S.

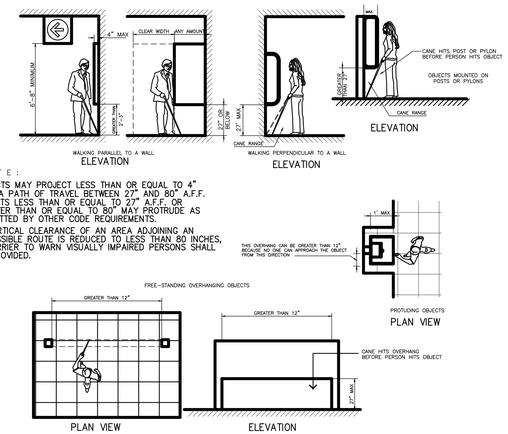

NOTE:

OBJECTS MAY PROJECT LESS THAN OR EQUAL TO 4" INTO A PATH OF TRAVEL BETWEEN 27" AND 80" A.F.F. OBJECTS LESS THAN OR EQUAL TO 27" A.F.F. OR GREATER THAN OR EQUAL TO 80" MAY PROTRUDE AS PERMITTED BY OTHER CODE REQUIREMENTS.

IF VERTICAL CLEARANCE OF AN AREA ADJOINING AN ACCESSIBLE ROUTE IS REDUCED TO LESS THAN 80 INCHES, A BARRIER TO WARN VISUALLY IMPAIRED PERSONS SHALL BE PROVIDED.

PROTRUDING OBJECTS CLEARANCE 06
SCALE: N.T.S.

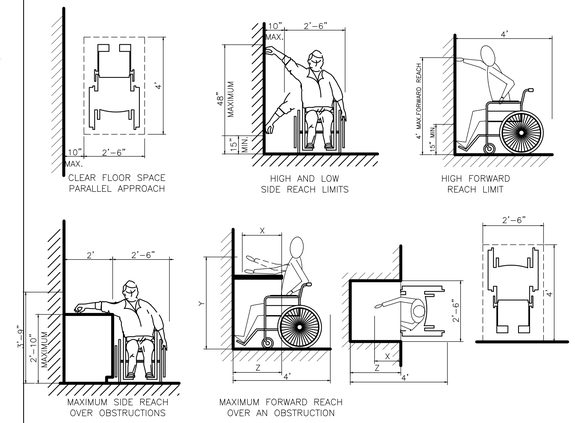

ACCESSIBLE REACH CLEARANCE 07
SCALE: N.T.S.

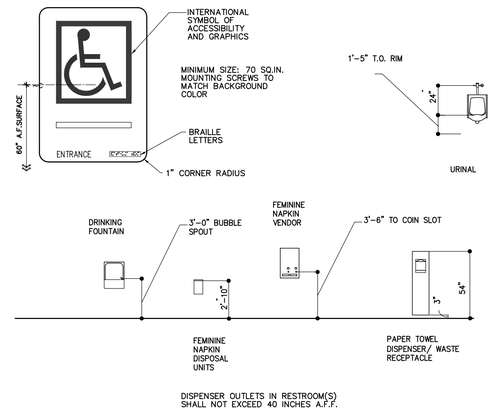

DISPENSER OUTLETS IN RESTROOM(S) SHALL NOT EXCEED 40 INCHES A.F.F.

MOUNTING HEIGHTS 07
SCALE: N.T.S.

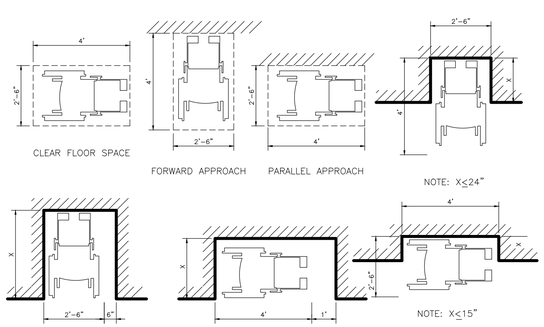

NOTE: IF X>24", THEN AN ADDITIONAL MANEUVERING CLEARANCE OF 6" SHALL BE PROVIDED AS SHOWN

NOTE: IF X>15", THEN AN ADDITIONAL MANEUVERING CLEARANCE OF 12" SHALL BE PROVIDED AS SHOWN

WHEEL CHAIR MANUVERING 09
SCALE: N.T.S.

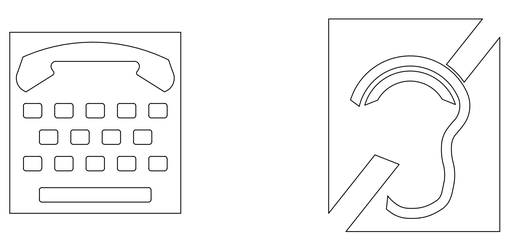

INTERNATIONAL TDD SYMBOL

INTERNATIONAL SYMBOL OF ACCESS FOR HEARING LOSS

INTERNATIONAL SYMBOLS 10

11

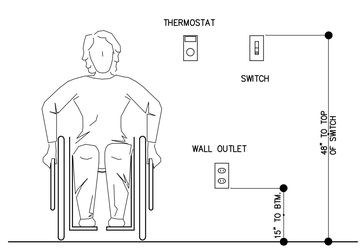

ELECTRICAL RECEPTACLE OUTLETS (30 AMP. OR LESS) SHALL BE LOCATED 48 INCHES MEASURED FROM THE TOP OF THE OUTLET BOX, NOR LESS THAN 15 INCHES MEASURED FROM THE BOTTOM OF THE OUTLET BOX TO FINISHED FLOOR LEVEL.

SWITCHING OF OVER-CURRENT DEVICES IN PANEL BOARDS SHALL BE 48 INCHES ABOVE FINISH FLOOR TO TOP.

CONTROLS, SWITCHES & OUTLETS 12
SCALE: N.T.S.

Narkweather ARCHITECTS INC.
73 330 HWY 111, SUITE A / PALM DESERT, CA 92260-4016
PHONE: (760) 346-4090 / E-MAIL: info@narkweather.net

OWNERSHIP OF DOCUMENTS
DRAWINGS AND SPECIFICATIONS AS INSTRUMENTS OF SERVICE ARE AND SHALL REMAIN THE PROPERTY OF THE DESIGNER WHETHER THE PROJECT FOR WHICH THEY WERE PREPARED IS EXECUTED OR NOT. THEY ARE NOT TO BE USED ON OTHER PROJECTS OR EXTENSIONS TO THIS PROJECT EXCEPT BY AGREEMENT IN WRITING AND WITH APPROPRIATE COMPENSATION TO Narkweather Architects Inc.
COPYRIGHT 2016 Narkweather Architects

CITY OF RANCHO MIRAGE
OBSERVATORY
PROJECT DESCRIPTION: Rancho Mirage Public Library
SITE ADDRESS: 71-100 California 111, Rancho Mirage, CA 92270

SHEET CONTENT
ACCESSIBILITY STANDARDS

DRAWING SCALE:
SCALE: (NONE)

ISSUE DATE		
MONTH	DAY	YEAR
SEPT.	29	2016

1	REVISION DATE:
2	REVISION DATE:
	REVISION DATE:
	REVISION DATE:
	REVISION DATE:

(PLAN CHECK ENGINEER STAMP)
RECOMMENDED FOR APPROVAL BY:
LELAND E. COLE — DATE 9/27/16
R.C.E. 47159 EXP. 12/31/17
APPROVED BY CITY OF RANCHO MIRAGE:
WILLIAM A. ENOS, CITY ENGINEER
R.C.E. 42010 EXP. 6/30/2017
DATE

DRAWING NUMBER
G1
SHEET # 5 OF 56
PRIVATE REFERENCE #
CITY REFERENCE #

Bid Set - 10/07/2016

SITE DEVELOPMENT & ACCESSIBLE ROUTE OF TRAVEL

1. WHEN MORE THAN ONE BUILDING OR FACILITY IS LOCATED ON A SITE, ACCESSIBLE ROUTES OF TRAVEL SHALL BE PROVIDED BETWEEN BUILDINGS AND ACCESSIBLE SITE FACILITIES.
2. THE ACCESSIBLE ROUTE OF TRAVEL SHALL BE THE MOST PRACTICAL DIRECT ROUTE BETWEEN ACCESSIBLE BUILDING ENTRANCES, ACCESSIBLE SITE FACILITIES, AND THE ACCESSIBLE ENTRANCE TO THE SITE.
3. AT LEAST ONE ACCESSIBLE ROUTE WITHIN THE BOUNDARY OF THE SITE SHALL BE PROVIDED FROM PUBLIC TRANSPORTATION STOPS, ACCESSIBLE PARKING AND ACCESSIBLE PASSENGER LOADING ZONES, AND PUBLIC STREETS OR SIDEWALKS, TO THE ACCESSIBLE BUILDING ENTRANCE THEY SERVE. THE ACCESSIBLE ROUTE SHALL, TO THE MAXIMUM EXTENT FEASIBLE, COINCIDE WITH THE ROUTE FOR THE GENERAL PUBLIC.
4. WHEN A BUILDING OR PORTION OF A BUILDING IS REQUIRED TO BE ACCESSIBLE OR ADAPTABLE, AN ACCESSIBLE ROUTE OF TRAVEL SHALL BE PROVIDED TO ALL PORTIONS OF THE BUILDING, TO ACCESSIBLE BUILDING ENTRANCES, AND BETWEEN THE BUILDING AND THE PUBLIC WAY.
5. AT LEAST ONE ACCESSIBLE ROUTE SHALL CONNECT ACCESSIBLE BUILDING OR FACILITY ENTRANCES WITH ALL ACCESSIBLE SPACES AND ELEMENTS THAT ARE ON THE SAME SITE AND WITH ALL ACCESSIBLE DWELLING UNITS WITHIN THE BUILDING OR FACILITY.
6. WHEN MORE THAN ONE ROUTE OF TRAVEL IS PROVIDED, ALL ROUTES SHALL BE ACCESSIBLE.

WALKS & SIDEWALKS

1. WALKS AND SIDEWALKS SHALL HAVE A CONTINUOUS COMMON SURFACE, NOT INTERRUPTED BY STEPS OR BY ABRUPT CHANGES IN LEVEL EXCEEDING 1/2", AND SHALL BE A MINIMUM OF 48" IN WIDTH.
2. WHEN ABRUPT CHANGES IN LEVEL NOT EXCEEDING 1/2" OCCUR, THEY SHALL BE BEVELED WITH A SLOPE NO GREATER THAN 1:2, EXCEPT THAT LEVEL CHANGES NOT EXCEEDING 1/4" MAY BE VERTICAL.
3. ABRUPT CHANGES IN LEVEL ALONG ANY ACCESSIBLE ROUTE EXCEEDING ½" SHALL COMPLY WITH THE REQUIREMENTS FOR CURB RAMPS.
4. WHEN THE SLOPE IN THE DIRECTION OF TRAVEL OF ANY WALK EXCEEDS 1 VERTICAL TO 20 HORIZONTAL IT SHALL COMPLY WITH THE PROVISIONS OF SECTION 1007 AS A PEDESTRIAN RAMP.
5. WALK AND SIDEWALK SURFACE CROSS SLOPES SHALL NOT EXCEED 1/4" PER FOOT.
6. WALKS SHALL BE PROVIDED WITH A LEVEL AREA NOT LESS THAN 60" BY 60" AT A DOOR OR GATE THAT SWINGS TOWARD THE WALK, AND NOT LESS THAN 48" WIDE BY 44" DEEP AT A DOOR OR GATE THAT SWINGS AWAY FROM THE WALK.
7. WALKS SHALL EXTEND A MINIMUM OF 24" TO THE SIDE OF THE STRIKE EDGE OF A DOOR OR GATE THAT SWINGS TOWARD THE WALK.
8. ALL WALKS WITH CONTINUOUS GRADIENTS SHALL HAVE LEVEL AREAS AT LEAST 5' IN LENGTH AT INTERVALS OF AT LEAST EVERY 400'.
9. WALK AND SIDEWALK SURFACES SHALL BE SLIP-RESISTANT AS FOLLOWS:
   a. SURFACES WITH A SLOPE OF LESS THAN 6% GRADIENT SHALL BE AT LEAST AS SLIP-RESISTANT AS THAT DESCRIBED AS A MEDIUM SALTED FINISH.
   b. SURFACES WITH A SLOPE OF 6% GRADIENT SHALL BE SLIP-RESISTANT.
10. WALKS, SIDEWALKS, AND PEDESTRIAN WAYS SHALL BE FREE OF GRATINGS WHENEVER POSSIBLE. FOR GRATINGS LOCATED IN THE SURFACE OF ANY OF THESE AREAS, GRID OPENINGS IN GRATINGS SHALL BE NO GREATER THAN ½" WIDE IN ONE DIRECTION. IF GRATINGS HAVE ELONGATED OPENINGS, THEY SHALL BE PLACED SO THAT THE LONG DIMENSION IS PERPENDICULAR TO THE DOMINANT DIRECTION OF TRAVEL.

RAMPS

1. THE MAXIMUM SLOPE OF A RAMP THAT SERVES ANY EXITWAY, PROVIDES ACCESS FOR PERSONS WITH DISABILITIES, OR IS IN THE PATH OF TRAVEL SHALL BE 1' RISE IN 12' OF HORIZONTAL RUN.
2. THE CROSS SLOPE OF RAMP SURFACES SHALL BE NO GREATER THAN 1:48. (1/4" PER FT)
3. THE WIDTH OF RAMPS SHALL BE AS REQUIRED FOR STAIRWAYS AND EXITS.
4. PEDESTRIAN RAMPS SERVING PRIMARY ENTRANCES TO BUILDINGS HAVING AN OCCUPANT LOAD OF 300 OR MORE SHALL HAVE A MINIMUM CLEAR WIDTH OF 60".
5. ALL OTHER PEDESTRIAN RAMPS SERVING PRIMARY ENTRANCES SHALL HAVE A MINIMUM WIDTH OF 48".
6. LANDINGS SHALL BE PROVIDED AT THE TOP AND BOTTOM OF EACH RAMP.
7. INTERMEDIATE LANDINGS SHALL BE PROVIDED AT INTERVALS NOT EXCEEDING 30" OF VERTICAL RISE AND AT EACH CHANGE OF DIRECTION.
8. TOP LANDINGS SHALL BE NOT LESS THAN 60" WIDE AND SHALL HAVE A LENGTH OF NOT LESS THAN 60" IN THE DIRECTION OF RAMP RUN.
9. DOORS IN ANY POSITION SHALL NOT REDUCE THE MINIMUM DIMENSION OF THE RAMP LANDING TO LESS THAN 42" AND SHALL NOT REDUCE THE REQUIRED WIDTH BY MORE THAN 3" WHEN FULL OPEN.
10. THE WIDTH OF THE LANDING SHALL EXTEND 24" PAST THE STRIKE EDGE OF ANY DOOR OR GATE FOR EXTERIOR RAMPS AND 18" PAST THE STRIKE EDGE FOR INTERIOR RAMPS.
11. AT BOTTOM AND INTERMEDIATE LANDINGS, THE WIDTH SHALL BE AT LEAST THE SAME AS REQUIRED FOR THE RAMP.
12. INTERMEDIATE LANDING AT A CHANGE OF DIRECTION IN EXCESS OF 30 DEGREES AND BOTTOM LANDINGS SHALL HAVE A DIMENSION IN THE DIRECTION OF RAMP RUN OF NOT LESS THAN 72" TO ACCOMMODATE THE HANDRAIL EXTENSION.
13. OTHER INTERMEDIATE LANDINGS SHALL HAVE A DIMENSION IN THE DIRECTION OF RAMP RUN OF NOT LESS THAN 60".
14. RAMP LANDINGS ARE NOT CONSIDERED IN DETERMINING THE MAXIMUM HORIZONTAL DISTANCE OF EACH RAMP.
15. HANDRAILS ARE REQUIRED ON RAMPS THAT PROVIDE ACCESS IF THE RAMP SLOPE EXCEEDS 1' RISE IN 20' OF HORIZONTAL RUN.
16. HANDRAILS SHALL BE PLACED ON EACH SIDE OF EACH RAMP, SHALL BE CONTINUOUS THE FULL LENGTH OF THE RAMP, SHALL BE 34" TO 38" ABOVE THE RAMP SURFACE, SHALL EXTEND A MINIMUM OF 1' BEYOND THE TOP AND BOTTOM OF THE RAMP, AND THE ENDS SHALL BE RESUMED.
17. THE GRIP PORTION OF HANDRAILS SHALL BE NOT LESS THAN 1-1/4" NOR MORE THAN 1-1/2", OR THE SHAPE SHALL PROVIDE AN EQUIVALENT GRIPPING SURFACE, AND ALL SURFACES SHALL BE SMOOTH WITH NO SHARP CORNERS. HANDRAILS SHALL NOT ROTATE WITHIN THEIR FITTINGS.
18. HANDRAILS PROJECTING FROM A WALL SHALL HAVE A SPACE OF 1-1/2" BETWEEN THE WALL AND THE HANDRAIL.
19. HANDRAILS MAY BE LOCATED IN A RECESS IF THE RECESS IS A MAXIMUM OF 3" DEEP AND EXTENDS AT LEAST 18" ABOVE THE TOP OF THE RAIL.
20. ANY WALL OR OTHER SURFACE ADJACENT TO HANDRAILS SHALL BE FREE OF SHARP OR ABRASIVE ELEMENTS. EDGES SHALL HAVE A MINIMUM RADIUS OF 1/8".
21. WHERE THE RAMP SURFACE IS NOT BOUNDED BY A WALL OR FENCE AND THE RAMP EXCEEDS 10' IN LENGTH, THE RAMP SHALL COMPLY WITH ONE OF THE FOLLOWING REQUIREMENTS:
   a. A GUIDE CURB A MINIMUM OF 2" IN HEIGHT SHALL BE PROVIDED AT EACH SIDE OF THE RAMP;
   b. A WHEEL GUIDE RAIL SHALL BE PROVIDED, CENTERED 3" ± 1" ABOVE THE SURFACE OF THE RAMP.
22. OUTDOOR RAMPS AND THEIR APPROACHES SHALL BE DESIGNED AND CONSTRUCTED SO THAT WATER WILL NOT ACCUMULATE ON WALKING SURFACES.

CURB RAMPS

1. CURB RAMPS SHALL BE A MINIMUM OF 4' IN WIDTH AND SHALL LIE, GENERALLY, IN A SINGLE SLOPED PLANE, WITH A MINIMUM OF SURFACE WARPING AND CROSS SLOPE.
2. THE SLOPE OF CURB RAMPS SHALL NOT EXCEED 1 VERTICAL TO 12 HORIZONTAL.
3. MAXIMUM SLOPES OF ADJOINING GUTTERS, ROAD SURFACE IMMEDIATELY ADJACENT TO THE CURB RAMP, OR ACCESSIBLE ROUTE, SHALL NOT EXCEED 1:20 WITHIN 4' OF THE TOP AND BOTTOM OF THE CURB RAMP. THE SLOPE OF THE FANNED OR FLARED SIDES OF CURB RAMPS SHALL NOT EXCEED 1 VERTICAL TO 8 HORIZONTAL.
4. A LEVEL LANDING 4' DEEP SHALL BE PROVIDED AT THE UPPER END OF EACH CURB RAMP OVER ITS FULL WIDTH TO PERMIT SAFE EGRESS FROM THE RAMP SURFACE, OR THE SLOPE OF THE FANNED OR FLARED SIDES OF THE CURB RAMP SHALL NOT EXCEED 1 VERTICAL TO 12 HORIZONTAL.
5. TRANSITIONS FROM RAMPS TO WALKS, GUTTERS, OR STREETS SHALL BE FLUSH AND FREE OF ABRUPT CHANGES, EXCEPT THAT THE LOWER END OF EACH CURB RAMP SHALL HAVE A 1/2" LIP BEVELED AT 45 DEGREES.
7. THE SURFACE OF EACH CURB RAMP AND ITS FLARED SIDES SHALL BE STABLE, FIRM, AND SLIP-RESISTANT AND SHALL BE OF CONTRASTING FINISH FROM THAT OF THE ADJACENT SIDEWALK.
8. ALL CURB RAMPS SHALL HAVE A GROOVED BORDER 12" WIDE AT THE LEVEL SURFACE OF THE SIDEWALK ALONG THE TOP AND EACH SIDE APPROXIMATELY 3/4" ON CENTER. ALL CURB RAMPS CONSTRUCTED BETWEEN THE FACE OF THE CURB AND THE STREET SHALL HAVE A GROOVED BORDER AT THE LEVEL SURFACE OF THE SIDEWALK.
9. A CURB RAMP SHALL HAVE A DETECTABLE WARNING THAT EXTENDS THE FULL WIDTH AND DEPTH OF THE CURB RAMP INSIDE THE GROOVED BORDER WHEN THE RAMP SLOPE IS LESS THAN 1 VERTICAL TO 15 HORIZONTAL. DETECTABLE WARNINGS SHALL CONSIST OF RAISED TRUNCATED DOMES WITH A DIAMETER OF NOMINAL 0.9" AT THE BASE TAPERING TO 0.45" AT THE TOP, A HEIGHT OF NOMINAL 0.2", AND A CENTER-TO-CENTER SPACING OF NOMINAL 2.35", IN COMPLIANCE WITH FIGURE 11B-23. "NOMINAL", AS USED HERE, SHALL BE IN ACCORDANCE WITH SECTION 12-31-102, STATE REFERENCED STANDARDS CODE. THE DETECTABLE WARNING SHALL CONTRAST VISUALLY WITH ADJOINING SURFACES, EITHER LIGHT-ON-DARK OR DARK ON-LIGHT. THE MATERIAL USED TO PROVIDE CONTRAST SHALL BE AN INTEGRAL PART OF THE WALKING SURFACE. THE DOMES MAY BE CONSTRUCTED IN A VARIETY OF METHODS, INCLUDING CAST-IN-PLACE OR STAMPED, OR MAY BE PART OF A PREFABRICATED SURFACE TREATMENT.
10. CURB RAMPS SHALL BE LOCATED OR PROTECTED TO PREVENT THEIR OBSTRUCTION BY PARKED CARS.

PEDESTRIAN GRADE SEPARATIONS

1. PEDESTRIAN RAMPS ON PEDESTRIAN GRADE SEPARATIONS SHALL COMPLY WITH THE REQUIREMENTS OF SECTION 1007 FOR RAMPS.
2. WHERE PEDESTRIAN GRADE SEPARATIONS CROSS STREETS OR OTHER VEHICULAR TRAFFIC WAYS, AND WHERE A STREET LEVEL CROSSING CAN REASONABLY AND SAFELY BE USED BY PERSONS WITH DISABILITIES, THERE SHALL BE PROVIDED CONFORMING CURB RAMPS AND A USABLE PATHWAY.
3. CROSS SLOPES OF WALKING SURFACES SHALL BE THE MINIMUM POSSIBLE AND SHALL NOT EXCEED 1/4" PER FOOT. THE SLOPE OF ANY APPRECIABLY WARPED WALKING SURFACE SHALL NOT EXCEED 1 VERTICAL IN 12 HORIZONTAL IN ANY DIRECTION.

ENTRANCES & EXITS

1. ALL ENTRANCES AND ALL EXTERIOR GROUND FLOOR EXIT DOORS TO BUILDINGS AND FACILITIES SHALL BE MADE ACCESSIBLE TO PERSONS WITH DISABILITIES.
2. DURING PERIODS OF PARTIAL OR RESTRICTED USE OF A BUILDING OR FACILITY, THE ENTRANCES USED FOR PRIMARY ACCESS SHALL BE ACCESSIBLE TO AND USABLE BY PERSONS WITH DISABILITIES.
3. EXIT DOORS SHALL BE OPENABLE FROM THE INSIDE WITHOUT THE USE OF A KEY OR ANY SPECIAL KNOWLEDGE OR EFFORT.
4. MANUALLY OPERATED EDGE OR SURFACE-MOUNTED FLUSH BOLTS AND SURFACE BOLTS ARE PROHIBITED. WHEN EXIT DOORS ARE USED IN PAIRS AND APPROVED AUTOMATIC FLUSH BOLTS ARE USED, THE DOOR LEAF HAVING THE AUTOMATIC FLUSH BOLTS SHALL HAVE NO DOORKNOB OR SURFACE-MOUNTED HARDWARE. THE UNLATCHING OF ANY LEAF SHALL NOT REQUIRE MORE THAN ONE OPERATION.
5. LATCHING AND LOCKING DOORS THAT ARE HAND ACTIVATED AND WHICH ARE IN A PATH OF TRAVEL SHALL BE OPERABLE WITH A SINGLE EFFORT BY LEVER TYPE HARDWARE, PANIC BARS, PUSH-PULL ACTIVATING BARS, OR OTHER HARDWARE DESIGNED TO PROVIDE PASSAGE WITHOUT REQUIRING THE ABILITY TO GRASP THE OPENING HARDWARE. LOCKED EXIT DOORS SHALL OPERATE AS ABOVE IN EGRESS DIRECTION.
6. HAND-ACTIVATED DOOR OPENING HARDWARE SHALL BE CENTERED BETWEEN 30" AND 44" ABOVE THE FLOOR.
7. EVERY DOORWAY WHICH IS LOCATED WITHIN AN ACCESSIBLE PATH OF TRAVEL SHALL BE OF A SIZE AS TO PERMIT THE INSTALLATION OF A DOOR NOT LESS THAN 3' IN WIDTH AND NOT LESS THAN 6'-8" IN HEIGHT. WHEN INSTALLED, EXIT DOORS SHALL BE CAPABLE OF OPENING SO THAT THE CLEAR WIDTH OF THE EXIT IS NOT LESS THAN 32", MEASURED BETWEEN THE FACE OF THE DOOR AND THE OPPOSITE STOP.
8. WHERE A PAIR OF DOORS IS UTILIZED, AT LEAST ONE OF THE DOORS SHALL PROVIDE A CLEAR, UNOBSTRUCTED OPENING WIDTH OF 32" WITH THE LEAF POSITIONED AT AN ANGLE OF 90 DEGREES FROM ITS CLOSED POSITION.
9. WHEN AN AUTOMATIC DOOR OPERATOR IS UTILIZED TO OPERATE A PAIR OF DOORS, AT LEAST ONE OF THE DOORS SHALL PROVIDE A CLEAR, UNOBSTRUCTED OPENING WIDTH OF 32" WITH THE DOOR POSITIONED AT AN ANGLE OF 90 DEGREES FROM ITS CLOSED POSITION.
10. FOR HINGED DOORS, THE OPENING WIDTH SHALL BE MEASURED WITH THE DOOR POSITIONED AT AN ANGLE OF 90 DEGREES FROM ITS CLOSED POSITION.
11. THERE SHALL BE A LEVEL AND CLEAR FLOOR OR LANDING ON EACH SIDE OF A DOOR. THE LEVEL AREA SHALL HAVE A LENGTH IN THE DIRECTION OF DOOR SWING OF AT LEAST 60" AND THE LENGTH OPPOSITE THE DIRECTION OF DOOR SWING OF 48" AS MEASURED AT RIGHT ANGLES TO THE PLANE OF THE DOOR IN THE CLOSED POSITION.
12. THE WIDTH OF THE LEVEL AREA ON THE SIDE TO WHICH THE DOOR SWINGS SHALL EXTEND A MINIMUM OF 24" PAST THE STRIKE EDGE OF THE DOOR FOR EXTERIOR DOORS AND A MINIMUM OF 18" PAST THE STRIKE EDGE FOR INTERIOR DOORS.
13. THE FLOOR OR LANDING SHALL BE NOT MORE THAN 1/2" LOWER THAN THE THRESHOLD OF THE DOORWAY.
14. THE SPACE BETWEEN TWO CONSECUTIVE DOOR OPENINGS IN A VESTIBULE, SERVING OTHER THAN A REQUIRED EXIT STAIRWAY, SHALL PROVIDE A MINIMUM OF 48" OF CLEAR SPACE FROM ANY DOOR OPENING INTO SUCH VESTIBULE WHEN THE DOOR IS POSITIONED AT AN ANGLE OF 90 DEGREES FROM ITS CLOSED POSITION. DOORS IN A SERIES SHALL SWING EITHER IN THE SAME DIRECTION OR AWAY FROM THE SPACE BETWEEN THE DOORS. SEE FIGURES 11B-30&31 FOR DESIGN ALTERNATIVES.
15. THE BOTTOM 10" OF ALL DOORS EXCEPT AUTOMATIC AND SLIDING SHALL HAVE A SMOOTH, UNINTERRUPTED SURFACE TO ALLOW THE DOOR TO BE OPENED BY A WHEELCHAIR FOOTREST WITHOUT CREATING A TRAP OR HAZARDOUS CONDITION. WHERE NARROW FRAME DOORS ARE USED, A 10" HIGH SMOOTH PANEL SHALL BE INSTALLED ON THE PUSH SIDE OF THE DOOR, WHICH WILL ALLOW THE DOOR TO BE OPENED BY A WHEELCHAIR FOOTREST WITHOUT CREATING A TRAP OR HAZARDOUS CONDITION.
16. RECESSED DOORMATS SHALL BE ADEQUATELY ANCHORED TO PREVENT INTERFERENCE WITH WHEELCHAIR TRAFFIC.

CONTROLS & OPERATING MECHANISMS

1. CONTROLS AND OPERATING MECHANISMS ARE REQUIRED TO BE ACCESSIBLE.
2. CLEAR FLOOR SPACE THAT ALLOWS A FORWARD OR PARALLEL APPROACH BY A PERSON USING A WHEELCHAIR SHALL BE PROVIDED AT CONTROLS, DISPENSERS, RECEPTACLES, AND OTHER OPERABLE EQUIPMENT.
3. THE HIGHEST OPERABLE PART OF ALL CONTROLS, DISPENSERS, RECEPTACLES, AND OTHER OPERABLE EQUIPMENT SHALL BE PLACED WITHIN 48" OF THE FLOOR BUT NOT LOWER THAN 15" IF FORWARD APPROACHED AND WITHIN S4" BUT NOT LOWER THAN 9" IF SIDE APPROACHED.
4. CONTROLS AND OPERATING MECHANISMS SHALL BE OPERABLE WITH ONE HAND AND SHALL NOT REQUIRE TIGHT GRASPING, PINCHING, OR TWISTING OF THE WRIST. THE FORCE REQUIRED TO ACTIVATE CONTROLS SHALL BE NO GREATER THAN 5 POUNDS OF FORCE.
5. FAUCET CONTROLS AND OPERATING MECHANISMS FOR KITCHEN SINKS SHALL BE OPERABLE WITH ONE HAND AND SHALL NOT REQUIRE GRASPING, PINCHING, OR TWISTING OF THE WRIST. THE FORCE REQUIRED TO ACTIVE FAUCET CONTROLS AND OPERATING MECHANISMS FOR KITCHEN SINKS SHALL BE NO GREATER THAN 5 PLF. LEVER-OPERATED, PUSH-TYPE, AND ELECTRONICALLY CONTROLLED MECHANISMS ARE EXAMPLES OF ACCEPTABLE DESIGNS. SELF-CLOSING VALVES ARE ALLOWED IF THE FAUCET REMAINS OPEN FOR AT LEAST 10 SECONDS.

HAZARDS & PROTRUDING OBJECTS

1. ABRUPT CHANGES IN LEVEL, EXCEPT BETWEEN A WALK OR SIDEWALK AND AN ADJACENT STREET OR DRIVEWAY, EXCEEDING 4" IN A VERTICAL DIMENSION, SUCH AS AT PLANTERS OR FOUNTAINS LOCATED IN OR ADJACENT TO WALKS, SIDEWALKS, OR OTHER PEDESTRIAN WAYS, SHALL BE IDENTIFIED BY WARNING CURBS PROJECTING AT LEAST 6" IN HEIGHT ABOVE THE WALK OR SIDEWALK SURFACE TO WARN THE BLIND OF A POTENTIAL DROP OFF.
2. WHEN A GUARDRAIL OR HANDRAIL IS PROVIDED, NO WARNING CURB IS REQUIRED WHEN A GUIDE-RAIL IS PROVIDED CENTERED 3" ± 1" ABOVE THE SURFACE OF THE WALK OR SIDEWALK, THE WALK IS 5 PERCENT OR LESS GRADIENT, OR NO ADJACENT HAZARD EXISTS.
3. OBJECTS PROJECTING FROM WALLS WITH THEIR LEADING EDGES BETWEEN 27" AND 80" ABOVE THE FINISHED FLOOR SHALL PROTRUDE NO MORE THAN 4" INTO WALKS, HALLS, CORRIDORS, PASSAGEWAYS, OR AISLES.
4. OBJECTS MOUNTED WITH THEIR LEADING EDGES AT OR BELOW 27" ABOVE THE FINISHED FLOOR MAY PROTRUDE ANY AMOUNT INTO WALKS, HALLS, CORRIDORS, PASSAGEWAYS OR AISLES.
5. FREE-STANDING OBJECTS MOUNTED ON POSTS OR PYLONS MAY OVERHANG 12" MAXIMUM FROM 27" TO 80" ABOVE THE GROUND OR FINISHED FLOOR.
6. PROTRUDING OBJECTS SHALL NOT REDUCE THE CLEAR WIDTH OF AN ACCESSIBLE ROUTE OR MANEUVERING SPACE.
7. WALKS, HALLS, CORRIDORS, PASSAGEWAYS, AISLES OR OTHER CIRCULATION SPACES SHALL HAVE 80" MINIMUM CLEAR HEAD ROOM.
8. ANY OBSTRUCTION THAT OVERHANGS A PEDESTRIAN WAY SHALL BE A MINIMUM OF 80" ABOVE THE WALKING SURFACE AS MEASURED FROM THE BOTTOM OF THE OBSTRUCTION.
9. WHERE A GUY SUPPORT IS USED PARALLEL TO A PATH OF TRAVEL, INCLUDING, BUT NOT LIMITED TO, SIDEWALKS, A GUY BRACE, SIDEWALK GUY OR SIMILAR DEVICE SHALL BE USED TO PREVENT AN OVERHANGING OBSTRUCTION AS DEFINED.
10. IF A WALK CROSSES OR ADJOINS A VEHICULAR WAY, AND THE WALKING SURFACES ARE NOT SEPARATED BY CURBS, RAILINGS, OR OTHER ELEMENTS BETWEEN THE PEDESTRIAN AREAS AND VEHICULAR AREAS, THE BOUNDARY BETWEEN THE AREAS SHALL BE DEFINED BY A CONTINUOUS DETECTABLE WARNING WHICH IS 36" WIDE.

SPACE ALLOWANCE & REACH RANGES

1. THE MINIMUM CLEAR FLOOR OR GROUND SPACE REQUIRED TO ACCOMMODATE A SINGLE, STATIONARY WHEELCHAIR AND OCCUPANT IS 30" BY 48". (THE MINIMUM FLOOR OR GROUND SPACE SHALL BE INCREASED TO 42" BY 48" WHEN SUCH SPACE IS PERPENDICULAR TO AN ADJACENT SEATING SPACE). THE MINIMUM CLEAR FLOOR OR GROUND SPACE FOR WHEELCHAIRS MAY BE POSITIONED FOR FORWARD OR PARALLEL APPROACH TO AN OBJECT. CLEAR FLOOR OR GROUND SPACE FOR WHEELCHAIRS MAY BE PART OF THE KNEE SPACE REQUIRED UNDER SOME OBJECTS.
2. ONE FULL UNOBSTRUCTED SIDE OF THE CLEAR FLOOR OR GROUND SPACE FOR A WHEELCHAIR SHALL ADJOIN OR OVERLAP AN ACCESSIBLE ROUTE OR ADJOIN ANOTHER WHEELCHAIR CLEAR FLOOR SPACE. IF A CLEAR FLOOR OR GROUND SPACE FOR A WHEELCHAIR IS LOCATED IN AN ALCOVE OR OTHERWISE CONFINED ON ALL OR PART OF THREE SIDES, ADDITIONAL MANEUVERING CLEARANCES SHALL BE PROVIDED.
3. THE SPACE REQUIRED FOR A WHEELCHAIR TO MAKE A 180 DEGREE TURN IS A CLEAR SPACE OF 60" DIAMETER OR A T-SHAPED SPACE.
4. THE MINIMUM CLEAR WIDTH REQUIRED FOR A WHEELCHAIR TO TURN AROUND AN OBSTRUCTION SHALL BE 36" WHERE THE OBSTRUCTION IS 48" OR MORE IN LENGTH AND 42" AND 48" WHERE THE OBSTRUCTION IS LESS THAN 48" IN LENGTH.
5. THE MINIMUM CLEAR WIDTH FOR SINGLE WHEELCHAIR PASSAGE SHALL BE 32" AT A POINT (24" MAXIMUM LENGTH) AND 36" CONTINUOUSLY.
6. THE MINIMUM WIDTH FOR TWO WHEELCHAIRS TO PASS IS 60".
7. IF THE CLEAR FLOOR SPACE ONLY ALLOWS FORWARD APPROACH TO AN OBJECT, THE MAXIMUM HIGH FORWARD REACH ALLOWED SHALL BE 48". THE MINIMUM LOW FORWARD REACH IS 15 ". IF THE HIGH FORWARD REACH IS OVER AN OBSTRUCTION,
8. IF THE CLEAR FLOOR SPACE ALLOWS PARALLEL APPROACH BY A PERSON IN A WHEELCHAIR, THE MAXIMUM HIGH SIDE REACH ALLOWED SHALL BE 54" AND THE LOW SIDE REACH SHALL BE NO LESS THAN 9" ABOVE THE FLOOR AS SHOWN IN FIGURES 11B-5D(A) & (B). IF THE SIDE REACH IS OVER AND OBSTRUCTION,

EMPLOYEE WORK AREAS & WORK STATIONS

1. SPECIFIC WORK STATIONS, WITH THE EXCEPTION OF WORK STATIONS IN SALES FACILITIES, CHECKSTANDS, TICKET BOOTHS, AND OTHER WORK STATIONS WITH SPECIFIC REQUIREMENTS CONTAINED IN OTHER PORTIONS OF THE REGULATIONS, NEED ONLY COMPLY WITH AISLE WIDTH AND FLOORS AND LEVELS, AND ENTRY-WAYS SHALL BE 32 " IN CLEAR WIDTH.
2. EMPLOYEE WORK AREAS SHALL BE ACCESSIBLE BY MEANS OF A 36" MINIMUM AISLE AND A 32" MINIMUM CLEAR OPENING DOOR WIDTH.
3. EMPLOYEE AREAS SHALL CONFORM TO ALL REQUIREMENTS OF THE DIVISION OF THE STATE ARCHITECT/ACCESS COMPLIANCE SECTION IN THE CALIFORNIA BUILDING CODE, PLUMBING CODE, AND ELECTRICAL CODE.

FIXED OR BUILT-IN SEATING, TABLES, & COUNTERS

1. WHERE FIXED OR BUILT-IN SEATING, TABLES, OR COUNTERS ARE PROVIDED FOR THE PUBLIC, AND IN GENERAL EMPLOYEE AREAS, 5%, BUT NEVER LESS THAN 1 MUST BE ACCESSIBLE.DDEDIT
2. THE TOPS OF TABLES AND COUNTERS SHALL BE 28" TO 34" FROM THE FLOOR OR GROUND.
3. IF SEATING FOR PEOPLE IN WHEELCHAIRS IS PROVIDED AT FIXED TABLES OR COUNTERS, KNEE SPACES AT LEAST 27" HIGH, 30" WIDE, AND 19" DEEP SHALL BE PROVIDED.
4. IF SEATING SPACES FOR PEOPLE IN WHEELCHAIRS ARE PROVIDED AT FIXED TABLES OR COUNTERS, CLEAR FLOOR SPACE COMPLYING WITH SECTION 1118B.4 SHALL BE PROVIDED. SUCH CLEAR FLOOR SPACE SHALL NOT OVERLAP KNEE SPACE BY MORE THAN 19".
5. WHERE A SINGLE COUNTER CONTAINS MORE THAN ONE TRANSACTION STATION, SUCH AS (BUT NOT LIMITED TO) A BANK COUNTER WITH MULTIPLE TELLER WINDOWS OR A RETAIL SALES COUNTER WITH MULTIPLE CASH REGISTER STATIONS, AT LEAST 5%, BUT NEVER LESS THAN 1, OF EACH TYPE OF STATION SHALL BE LOCATED AT A SECTION OF COUNTER THAT IS AT LEAST 36" LONG AND NO MORE THAN 28" TO 34" HIGH.

SIGNS & IDENTIFICATION

1. THE INTERNATIONAL SYMBOL OF ACCESSIBILITY SHALL CONSIST OF A WHITE FIGURE ON A BLUE BACKGROUND. THE BLUE SHALL BE EQUAL TO COLOR NO. 15090 IN FEDERAL STANDARD 599B.
2. LETTERS AND NUMBERS ON SIGNS SHALL HAVE A WIDTH-TO-HEIGHT RATIO OF BETWEEN 3:5 AND 1:1 AND A STROKE WIDTH-TO-HEIGHT RATIO BETWEEN L:5 AND 1:1
3. CHARACTERS AND NUMBERS ON SIGNS SHALL BE SIZED ACCORDING TO THE VIEWING DISTANCE FROM WHICH THEY ARE TO BE READ. THE MINIMUM HEIGHT IS MEASURED USING AN UPPER CASE X. LOWER CASE CHARACTERS ARE PERMITTED. FOR SIGNS SUSPENDED OR PROJECTED ABOVE THE FINISH FLOOR IN COMPLIANCE WITH SECTION 1121B, THE MINIMUM CHARACTER HEIGHT SHALL BE 3".
4. CHARACTERS AND SYMBOLS SHALL CONTRAST WITH THEIR BACKGROUND, EITHER LIGHT CHARACTERS ON A DARK BACKGROUND OR DARK CHARACTERS ON A LIGHT BACKGROUND.
5. WHEN RAISED CHARACTERS OR SYMBOLS ARE USED, THEY SHALL CONFORM TO ALL CODE PROVISIONS AND THE FOLLOWING.
   a. LETTERS AND NUMBERS ON SIGNS SHALL BE RAISED 1/32" MINIMUM AND SHALL BE SANS-SERIF UPPERCASE CHARACTERS ACCOMPANIED BY GRADE 2 BRAILLE.
   b. RAISED CHARACTERS OR SYMBOLS SHALL BE A MINIMUM OF 5/8" HIGH.
   c. PICTORIAL SYMBOL SIGNS (PICTOGRAMS) SHALL BE ACCOMPANIED BY THE EQUIVALENT VERBAL DESCRIPTION PLACED DIRECTLY BELOW THE PICTOGRAM. THE BORDER DIMENSION OF THE PICTOGRAM SHALL BE A MINIMUM OF 6" IN HEIGHT.
6. CONTRACTED GRADE 2 BRAILLE SHALL BE USED WHEREVER BRAILLE SYMBOLS ARE SPECIFICALLY REQUIRED IN OTHER PORTIONS OF THESE REGULATIONS. DOTS SHALL BE 1/10" ON CENTERS IN EACH CELL WITH 2/10" SPACE BETWEEN CELLS. DOTS SHALL BE RAISED A MINIMUM OF 1/40" ABOVE THE BACKGROUND.
7. ALL BUILDING ENTRANCES THAT ARE ACCESSIBLE TO AND USABLE BY PERSONS WITH DISABILITIES AND AT EVERY MAJOR JUNCTION ALONG OR LEADING TO AN ACCESSIBLE ROUTE OF TRAVEL SHALL BE IDENTIFIED WITH A SIGN DISPLAYING THE INTERNATIONAL SYMBOL OF ACCESSIBILITY AND WITH ADDITIONAL DIRECTIONAL SIGNS, AS REQUIRED, TO BE VISIBLE TO PERSONS ALONG APPROACHING PEDESTRIAN WAYS.
8. WHEN PERMANENT IDENTIFICATION IS PROVIDED FOR ROOMS AND SPACES, RAISED LETTERS SHALL BE PROVIDED AND SHALL BE ACCOMPANIED BY BRAILLE IN CONFORMANCE WITH SECTIONS 1117B.5.6 THROUGH 1117B.5.6.3. SIGNS SHALL BE INSTALLED ON THE WALL ADJACENT TO THE LATCH SIDE OF THE DOOR. WHERE THERE IS NO WALL SPACE ON THE LATCH SIDE, INCLUDING AT DOUBLE LEAF DOORS, SIGNS SHALL BE PLACED ON THE NEAREST ADJACENT WALL, PREFERABLY ON THE RIGHT. MOUNTING HEIGHT SHALL BE 60" ABOVE THE FINISHED FLOOR TO THE CENTERLINE OF THE SIGN. MOUNTING LOCATION SHALL BE DETERMINED SO THAT A PERSON MAY APPROACH WITHIN 3" OF SIGNAGE WITHOUT ENCOUNTERING PROTRUDING OBJECTS OR STANDING WITHIN THE SWING OF A DOOR
9. POLE SUPPORTED PEDESTRIAN TRAFFIC CONTROL BUTTONS SHALL BE IDENTIFIED WITH COLOR CODING CONSISTING OF A TEXTURED HORIZONTAL YELLOW BAND 2" IN WIDTH ENCIRCLING THE POLE, AND A 1" WIDE DARK BORDER BAND ABOVE AND BELOW THIS YELLOW BAND. COLOR CODING SHOULD BE PLACED IMMEDIATELY ABOVE THE CONTROL BUTTON. CONTROL BUTTONS SHALL BE LOCATED NO HIGHER THAN 48" ABOVE THE SURFACE ADJACENT TO THE POLE.

ELECTRICAL

1. THE TOP OF ELECTRICAL AND COMMUNICATION SYSTEM RECEPTACLE OUTLETS SHALL BE INSTALLED NOT LESS THAN 15" ABOVE THE FLOOR OR WORKING PLATFORM.
2. THE TOP OF THE GRIP OF THE OPERATING HANDLE OF CONTROLS OR SWITCHES INTENDED TO BE USED BY THE OCCUPANT OF THE ROOM OR AREA TO CONTROL LIGHTING AND RECEPTACLE OUTLETS, APPLIANCES, OR COOLING, HEATING, AND VENTILATING EQUIPMENT SHALL NOT BE MORE THAN 48" ABOVE THE FLOOR OR WORKING PLATFORM.
3. THE TOP OF FIRE ALARM INITIATING DEVICES (BOXES) SHALL BE LOCATED 48" ABOVE THE LEVEL OF THE FLOOR, WORKING PLATFORM, GROUND SURFACE, OR SIDEWALK.

CORRIDORS & AISLES

1. EVERY CORRIDOR SERVING AN OCCUPANT LOAD OF 10 OR MORE SHALL NOT BE LESS THAN 44" IN WIDTH.
2. CORRIDORS SERVING AN OCCUPANT LOAD OF LESS THAN 10 SHALL NOT BE LESS THAN 36" IN WIDTH.
3. CORRIDORS WHICH ARE LOCATED ON AN ACCESSIBLE ROUTE AND EXCEED 200' IN LENGTH SHALL HAVE A MINIMUM CLEAR WIDTH OF 60"; HAVE, AT A CENTRAL LOCATION, A 60" BY 60" MINIMUM WHEELCHAIR TURNING SPACE OR PASSING ALCOVE; HAVE, AT A CENTRAL LOCATION, AN INTERVENING CROSS OR TEE CORRIDOR, A MINIMUM OF 48" IN WIDTH; OR, HAVE, AT A CENTRAL LOCATION, AN OPENABLE DOOR.
4. CIRCULATION AISLES AND PEDESTRIAN WAYS SHALL BE SIZED ACCORDING TO FUNCTIONAL REQUIREMENTS AND IN NO CASE SHALL BE LESS THAN 36" IN CLEAR WIDTH.

FLOORS & LEVELS

1. IN BUILDINGS AND FACILITIES, FLOORS OF A GIVEN STORY SHALL BE A COMMON LEVEL THROUGHOUT, OR SHALL BE CONNECTED BY PEDESTRIAN RAMPS, PASSENGER ELEVATORS, OR SPECIAL ACCESS LIFTS.
2. GROUND AND FLOOR SURFACES ALONG ACCESSIBLE ROUTES AND IN ACCESSIBLE ROOMS AND SPACES, INCLUDING FLOORS, WALKS, RAMPS, STAIRS, AND CURB RAMPS, SHALL BE STABLE, FIRM, AND SLIP-RESISTANT.
3. CHANGES IN LEVEL UP TO 1/4" MAY BE VERTICAL AND WITHOUT EDGE TREATMENT.
4. CHANGES IN LEVEL BETWEEN 1/4" AND 1/2" SHALL BE ACCOMPLISHED BY MEANS OF A RAMP NO STEEPER THAN 1 VERTICAL TO 2 HORIZONTAL.
5. IF CARPET OR CARPET TILE IS USED ON A GROUND OR FLOOR SURFACE, IT SHALL BE SECURELY ATTACHED; HAVE A FIRM CUSHION, PAD OR BACKING OR NO CUSHION OR PAD; AND HAVE A LEVEL LOOP, TEXTURED LOOP, LEVEL CUT PILE, OR LEVEL CUT/UNCUT PILE TEXTURE. THE MAXIMUM PILE HEIGHT SHALL BE 1/2". EXPOSED EDGES OF CARPET SHALL BE FASTENED TO FLOOR SURFACES AND HAVE TRIM ALONG THE ENTIRE LENGTH OF THE EXPOSED EDGE.

SINGLE ACCOMMODATION SANITARY FACILITIES

1. THERE SHALL BE SUFFICIENT SPACE IN THE TOILET ROOM FOR A WHEELCHAIR MEASURING 30" WIDE BY 48" LONG TO ENTER THE ROOM AND PERMIT THE DOOR TO CLOSE.
5. UNISEX SANITARY FACILITIES SHALL BE IDENTIFIED BY A CIRCLE 1/4" THICK, 12" IN DIAMETER, WITH A 1/4" THICK TRIANGLE SUPERIMPOSED ON THE CIRCLE AND WITHIN THE 12" DIAMETER.
6. GEOMETRIC (CIRCLE & TRIANGLE) SYMBOLS ON SANITARY FACILITY DOORS SHALL BE CENTERED ON THE DOOR AT A HEIGHT OF 55" TO 60" AND THEIR COLOR AND CONTRAST SHALL BE DISTINCTLY DIFFERENT FROM THE COLOR AND CONTRAST OF THE DOOR.

SANITARY FACILITY FIXTURES & ACCESSORIES

1. THE HEIGHT OF ACCESSIBLE WATER CLOSETS SHALL BE A MINIMUM OF 17" AND A MAXIMUM OF 19" MEASURED TO THE TOP OF A MAXIMUM 2" HIGH TOILET SEAT, EXCEPT THAT 3" SEATS SHALL BE PERMITTED ONLY IN ALTERATIONS WHERE THE EXISTING FIXTURE IS LESS THAN 15" HIGH.
2. A CLEAR FLOOR SPACE 30" BY 48" SHALL BE PROVIDED IN FRONT OF A LAVATORY TO ALLOW A FORWARD APPROACH. SUCH CLEAR FLOOR SPACE SHALL ADJOIN OR OVERLAP AN ACCESSIBLE ROUTE AND SHALL EXTEND INTO KNEE AND TOE SPACE UNDERNEATH THE LAVATORY.
3. LAVATORIES ADJACENT TO A WALL SHALL BE MOUNTED WITH A MINIMUM DISTANCE OF 18" TO THE CENTER LINE OF THE FIXTURE.
4. LAVATORIES SHALL BE MOUNTED WITH THE RIM OR COUNTER SURFACE NO HIGHER THAN 34" ABOVE THE FINISHED FLOOR AND WITH A CLEARANCE OF AT LEAST 29" FROM THE FLOOR TO THE BOTTOM OF THE APRON WITH KNEE CLEARANCE UNDER THE FRONT LIP EXTENDING A MINIMUM OF 30" IN WIDTH AND 8" MINIMUM DEPTH AT THE TOP. TOE CLEARANCE SHALL BE THE SAME WIDTH AND SHALL BE A MINIMUM OF 9" HIGH FROM THE FLOOR AND A MINIMUM OF 17" DEEP FROM THE FRONT OF THE LAVATORY.
5. HOT WATER AND DRAIN PIPES ACCESSIBLE UNDER LAVATORIES SHALL BE INSULATED OR OTHERWISE COVERED. THERE SHALL BE NO SHARP OR ABRASIVE SURFACES UNDER LAVATORIES.
6. WHERE URINALS ARE PROVIDED, AT LEAST ONE SHALL HAVE A CLEAR FLOOR SPACE 30" BY 48" IN FRONT OF THE URINAL TO ALLOW FORWARD APPROACH.
7. WHERE ONE OR MORE URINALS ARE PROVIDED, AT LEAST ONE WITH A RIM PROJECTING A MINIMUM OF 14" FROM THE WALL AND AT A MAXIMUM OF 17" ABOVE THE FLOOR SHALL BE PROVIDED.
8. CONTROLS FOR WATER CLOSET FLUSH VALVES SHALL BE MOUNTED ON THE WIDE SIDE OF TOILET AREAS.
9. WATER CLOSET AND URINAL FLUSH VALVE CONTROLS, AND FAUCET AND OPERATING MECHANISM CONTROLS, SHALL BE OPERABLE WITH ONE HAND, SHALL NOT REQUIRE TIGHT GRASPING, PINCHING, OR TWISTING OF THE WRIST, AND SHALL BE MOUNTED NO MORE THAN 44" ABOVE THE FLOOR.
10. THE FORCE REQUIRED TO ACTIVATE WATER CLOSET AND URINAL FLUSH VALVE CONTROLS, AND FAUCET AND OPERATING MECHANISM CONTROLS, SHALL BE NO GREATER THAN 5 LBF.

Narkweather ARCHITECTS INC.
73 330 HWY 111, SUITE A / PALM DESERT, CA 92260-4016
PHONE: (760) 346-4090 / E-MAIL: info@narkweather.net

OWNERSHIP OF DOCUMENTS
DRAWINGS AND SPECIFICATIONS AS INSTRUMENTS OF SERVICE ARE AND SHALL REMAIN THE PROPERTY OF THE DESIGNER WHETHER THE PROJECT FOR WHICH THEY WERE PREPARED IS EXECUTED OR NOT. THEY ARE NOT TO BE USED ON OTHER PROJECTS OR EXTENSIONS TO THIS PROJECT EXCEPT BY AGREEMENT IN WRITING AND WITH APPROPRIATE COMPENSATION TO Narkweather Architects Inc.
COPYRIGHT 2016 Narkweather Architects

CITY OF RANCHO MIRAGE
PROJECT DESCRIPTION: OBSERVATORY
Rancho Mirage Public Library
SITE ADDRESS: 71-100 California 111, Rancho Mirage, CA 92270

SHEET CONTENT
ACCESSIBILITY COMPLIANCE NOTES

DRAWING SCALE:
SCALE: (NONE)

ISSUE DATE		
MONTH	DAY	YEAR
SEPT.	29	2016

1	REVISION DATE:
2	REVISION DATE:
	REVISION DATE:
	REVISION DATE:
	REVISION DATE:

(PLAN CHECK ENGINEER STAMP)
RECOMMENDED FOR APPROVAL BY:
LELAND E. COLE 9/27/16 DATE
R.C.E. 47159 EXP. 12/31/17
APPROVED BY CITY OF RANCHO MIRAGE:
WILLIAM A. ENOS, CITY ENGINEER R.C.E. 43910, EXP. 6/30/2013 DATE

DRAWING NUMBER
G2
SHEET # 6 OF 56
PRIVATE REFERENCE #
CITY REFERENCE #

Bid Set - 10/07/2016

11. SELF–CLOSING FAUCET CONTROL VALVES ARE ALLOWED IF THE FAUCET REMAINS OPEN FOR AT LEAST 10 SECONDS.

12. MIRRORS SHALL BE MOUNTED WITH THE BOTTOM EDGE NO HIGHER THAN 40" FROM THE FLOOR.

13. WHERE TOWEL, SANITARY NAPKINS, WASTE RECEPTACLES, AND OTHER SIMILAR DISPENSING AND DISPOSAL FIXTURES ARE PROVIDED, AT LEAST ONE OF EACH TYPE SHALL BE LOCATED WITH ALL OPERABLE PARTS, INCLUDING COIN SLOTS, WITHIN 40" FROM THE FINISHED FLOOR.

14. TOILET TISSUE DISPENSERS SHALL BE LOCATED ON THE WALL WITHIN 12" OF THE FRONT EDGE OF THE TOILET SEAT AND NO LOWER THAN 19" FROM THE FLOOR. DISPENSERS THAT CONTROL DELIVERY OR THAT DO NOT PERMIT CONTINUOUS PAPER FLOW SHALL NOT BE USED.

15. TOILET ROOM FLOORS SHALL HAVE A SMOOTH, HARD, NON–ABSORBENT SURFACE SUCH AS PORTLAND CEMENT, CONCRETE, CERAMIC TILE OR OTHER APPROVED MATERIAL WHICH EXTENDS UPWARD ONTO THE WALLS AT LEAST 5". WALLS WITHIN WATER CLOSET COMPARTMENTS AND WALLS WITHIN 24" OF THE FRONT AND SIDES OF URINALS SHALL BE SIMILARLY FINISHED TO A HEIGHT OF 48" AND, EXCEPT FOR STRUCTURAL ELEMENTS, THE MATERIALS USED IN SUCH WALLS SHALL BE A TYPE WHICH IS NOT ADVERSELY AFFECTED BY MOISTURE.

GRAB BARS

1. GRAB BARS SHALL BE LOCATED ON EACH SIDE, OR ON ONE SIDE AND THE BACK OF THE ACCESSIBLE TOILET STALL OR COMPARTMENT.

2. GRAB BARS AT THE SIDE SHALL BE AT LEAST 42" LONG WITH THE FRONT END POSITIONED 24" IN FRONT OF THE WATER CLOSET STOOL AND WITH THE BACK END POSITIONED NO MORE THAN 12" FROM THE REAR WALL. GRAB BARS AT THE BACK SHALL BE NOT LESS THAN 36" LONG.

3. GRAB BARS SHALL BE SECURELY ATTACHED 33" ABOVE AND PARALLEL TO THE FLOOR, EXCEPT THAT WHERE A TANK–TYPE TOILET IS USED WHICH OBSTRUCTS PLACEMENT AT 33", THE GRAB BAR MAY BE AS HIGH AS 36".

4. THE DIAMETER OR WIDTH OF THE GRIPPING SURFACES OF A GRAB BAR SHALL BE 1–1/4" TO 1–1/2" OR THE SHAPE SHALL PROVIDE AN EQUIVALENT GRIPPING SURFACE. IF GRAB BARS ARE MOUNTED ADJACENT TO A WALL, THE SPACE BETWEEN THE WALL AND THE GRAB BARS SHALL BE 1–1/2".

5. A GRAB BAR AND ANY WALL OR OTHER SURFACE ADJACENT TO IT SHALL BE FREE OF ANY SHARP OR ABRASIVE ELEMENTS. EDGES SHALL HAVE A MINIMUM RADIUS OF 1/8".

DRINKING FOUNTAINS

1. IN NEW CONSTRUCTION, WHERE MORE THAN ONE DRINKING FOUNTAIN OR WATER COOLER IS PROVIDED ON A FLOOR, 50% OF THOSE PROVIDED SHALL COMPLY WITH PLUMBING CODE SECTION 1507 AND SHALL BE ON AN ACCESSIBLE ROUTE.

2. DRINKING FOUNTAINS SHALL BE LOCATED COMPLETELY WITHIN ALCOVES OR OTHERWISE POSITIONED SO AS NOT TO ENCROACH INTO PEDESTRIAN WAYS. THE ALCOVE IN WHICH THE WATER FOUNTAIN IS LOCATED SHALL BE NOT LESS THAN 32" IN WIDTH AND 18" IN DEPTH.

3. DRINKING FOUNTAINS SHALL BE A MINIMUM OF 18" IN DEPTH AND THERE SHALL BE A CLEAR AND UNOBSTRUCTED KNEE SPACE UNDER THE DRINKING FOUNTAIN NOT LESS THAN 27" IN HEIGHT AND 8" IN DEPTH,THE DEPTH MEASUREMENT BEING TAKEN FROM THE FRONT EDGE OF THE FOUNTAIN.

4. THERE SHALL BE TOE CLEARANCE OF 9" IN HEIGHT ABOVE THE FLOOR, AND 17" IN DEPTH FROM THE FRONT EDGE OF THE FOUNTAIN.

5. A SIDE APPROACH DRINKING FOUNTAIN IS NOT ACCEPTABLE.

6. THE DRINKING FOUNTAIN BUBBLER SHALL BE ACTIVATED BY A CONTROL WHICH IS EASILY OPERATED BY A HANDICAPPED PERSON, SUCH AS A HAND–OPERATED LEVEL TYPE CONTROL LOCATED WITHIN 6" OF THE FRONT OF THE FOUNTAIN, A PUSH BAR CONTROL ALONG THE FRONT OF THE DRINKING FOUNTAIN, ETC.

7. THE BUBBLER OUTLET ORIFICE SHALL BE LOCATED WITHIN 6" OF THE FRONT OF THE DRINKING FOUNTAIN AND SHALL BE WITHIN 36" OF THE FLOOR. THE WATER STREAM FROM THE BUBBLER SHALL BE SUBSTANTIALLY PARALLEL TO THE FRONT EDGE OF THE DRINKING FOUNTAIN.

PUBLIC TELEPHONES

1. IF PUBLIC TELEPHONES ARE PROVIDED, THEY SHALL BE MADE ACCESSIBLE.

2. A CLEAR FLOOR OR GROUND SPACE AT LEAST 30" BY 48" THAT ALLOWS EITHER A FORWARD OR PARALLEL APPROACH BY A PERSON USING A WHEELCHAIR SHALL BE PROVIDED AT TELEPHONES.

3. BASES, ENCLOSURES AND FIXED SEATS SHALL NOT IMPEDE APPROACHES TO TELEPHONES BY PEOPLE WHO USE WHEELCHAIRS.

4. THE HIGHEST OPERABLE PART OF THE TELEPHONE SHALL BE WITHIN 48" OF THE FLOOR IF FORWARD APPROACHED AND 54" IF SIDE APPROACHED.

5. TELEPHONES MOUNTED DIAGONALLY IN A CORNER THAT REQUIRE WHEELCHAIR USERS TO REACH DIAGONALLY SHALL HAVE THE HIGHEST OPERABLE PART NO HIGHER THAN 54" ABOVE THE FLOOR.

6. THE CORD FROM THE TELEPHONE TO THE HANDSET SHALL BE AT LEAST 29" LONG.

7. TELEPHONES SHALL HAVE PUSH–BUTTON CONTROLS WHERE SERVICE FOR SUCH EQUIPMENT IS AVAILABLE.

8. IF TELEPHONE ENCLOSURES ARE PROVIDED, THEY SHALL COMPLY WITH THE FOLLOWING:

   a. FOR SIDE APPROACH TELEPHONES, THE ENCLOSURE OVERHANG SHALL BE NO GREATER THAN 19" AND THE HEIGHT OF THE LOWEST OVERHANGING PART SHALL BE EQUAL TO OR GREATER THAN 27".

   b. FOR FORWARD APPROACH TELEPHONES, IF THE ENCLOSURE OVERHANG IS GREATER THAN 12", THE CLEAR WIDTH OF THE ENCLOSURE SHALL BE 30" MINIMUM; IF THE CLEAR WIDTH OF THE ENCLOSURE IS LESS THAN 30", THE HEIGHT OF THE LOWEST OVERHANGING PART SHALL BE EQUAL TO OR GREATER THAN 27".

   c. ENTRANCES TO FULL–HEIGHT ENCLOSURES SHALL BE 30" MINIMUM.

   d. WHERE TELEPHONE ENCLOSURES PROTRUDE INTO WALLS, HALLS, CORRIDORS OR AISLES, THEY SHALL COMPLY WITH CLEARANCE PROVISIONS OF THE CBC.

9. TELEPHONES SHALL BE EQUIPPED WITH A RECEIVER THAT GENERATES A MAGNETIC FIELD IN THE AREA OF THE RECEIVER CAP. IF BANKS OF PUBLIC TELEPHONES ARE PROVIDED, AT LEAST ONE IN EACH BANK AND A TOTAL OF AT LEAST 25% OF THE TOTAL NUMBER OF PUBLIC TELEPHONES, INCLUDING CLOSED CIRCUIT TELEPHONES IN A BUILDING OR FACILITY, SHALL BE EQUIPPED WITH A VOLUME CONTROL. SUCH TELEPHONES SHALL BE CAPABLE OF A MINIMUM OF 12 DBA AND A MAXIMUM OF 18 DBA ABOVE NORMAL. IF AN AUTOMATIC RESET IS PROVIDED, 18 DBA MAY BE EXCEEDED. PUBLIC TELEPHONES WITH VOLUME CONTROL SHALL BE HEARING AID COMPATIBLE AND SHALL BE IDENTIFIED BY A SIGN CONTAINING A DEPICTION OF A TELEPHONE HANDSET WITH RADIATING SOUND WAVES.

10. IF A TOTAL OF FOUR OR MORE PUBLIC PAY TELEPHONES ARE PROVIDED AT THE INTERIOR AND EXTERIOR OF A SITE, AND IF AT LEAST ONE OF THE TOTAL IS IN AN INTERIOR LOCATION, THEN AT LEAST ONE INTERIOR PUBLIC TEXT TELEPHONE SHALL BE PROVIDED.

11. TEXT TELEPHONES SHALL COMPLY WITH THE FOLLOWING:

   a. TEXT TELEPHONES USED WITH A PAY TELEPHONE SHALL BE PERMANENTLY AFFIXED WITHIN OR ADJACENT TO THE TELEPHONE ENCLOSURE. IF AN ACOUSTIC COUPLER IS USED, THE TELEPHONE CORD SHALL BE SUFFICIENTLY LONG TO ALLOW CONNECTION OF THE TEXT TELEPHONE AND TELEPHONE RECEIVER.

   b. PAY TELEPHONES DESIGNED TO ACCOMMODATE A PORTABLE TEXT TELEPHONE SHALL BE EQUIPPED WITH A SHELF AND AN ELECTRICAL OUTLET WITHIN OR ADJACENT TO THE TELEPHONE ENCLOSURE. THE TELEPHONE HANDSET SHALL BE CAPABLE OF ACCOMMODATING A TEXT TELEPHONE AND SHALL HAVE 6" MINIMUM VERTICAL CLEARANCE IN THE AREA WHERE THE TEXT TELEPHONE IS TO BE PLACED.

   c. EQUIVALENT FACILITATION MAY BE SUBSTITUTED FOR THE ABOVE REQUIREMENTS AS DESCRIBED IN THE CBC.

   d. TEXT TELEPHONES SHALL BE IDENTIFIED BY THE INTERNATIONAL TDD SYMBOL (SEE FIGURE 11B–14). IF A FACILITY HAS A PUBLIC TEXT TELEPHONE, DIRECTIONAL SIGNAGE INDICATING THE LOCATION OF THE NEAREST SUCH TELEPHONE SHALL BE PLACED ADJACENT TO ALL BANKS OF TELEPHONES THAT DO NOT CONTAIN A TEXT TELEPHONE. SUCH DIRECTIONAL SIGNAGE SHALL INCLUDE THE INTERNATIONAL TDD SYMBOL. IF A FACILITY HAS NO BANKS OF TELEPHONES, THE DIRECTIONAL SIGNAGE SHALL BE PROVIDED AT THE ENTRANCE OR IN A BUILDING DIRECTORY.

12. IF TELEPHONE BOOKS ARE PROVIDED, THEY SHALL BE LOCATED WITHIN 48" OF THE FLOOR IF FORWARD APPROACHED AND WITHIN 54" IF SIDE APPROACHED.

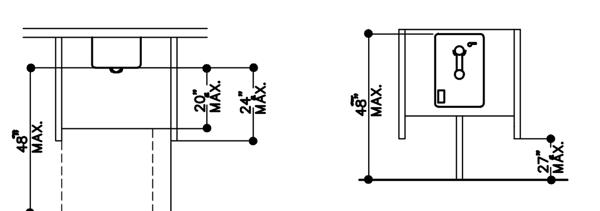

* HEIGHT TO HIGHEST OPERABLE PART WHICH IS ESSENTIAL TO BASIC OPERATION OF THE TELEPHONE.

DOOR OPERATIONS

1. MAXIMUM EFFORT TO OPERATE DOORS SHALL NOT EXCEED 5 POUNDS FOR EXTERIOR DOORS AND 5 POUNDS FOR INTERIOR DOORS, SUCH PULL OR PUSH EFFORT BEING APPLIED AT RIGHT ANGLES TO HINGED DOORS AND AT THE CENTER PLANE OF SLIDING OR FOLDING DOORS. COMPENSATING DEVICES OR AUTOMATIC DOOR OPERATORS MAY BE UTILIZED TO MEET THE ABOVE STANDARDS. WHEN FIRE DOORS ARE REQUIRED, THE MAXIMUM EFFORT TO OPERATE THE DOOR MAY BE INCREASED TO THE MAXIMUM ALLOWABLE BY THE APPROPRIATE ADMINISTRATIVE AUTHORITY, NOT TO EXCEED 15 POUNDS.

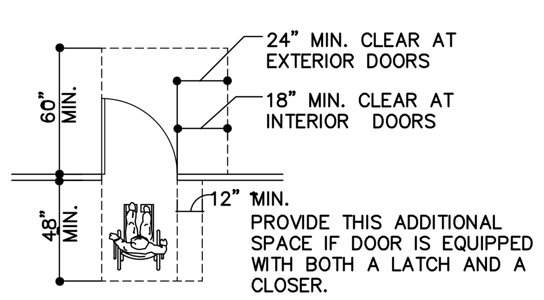

FINISH NOTES REFER TO PLANS AND DETAILS AND USE NOTES AS APPLICABLE

1. REFER TO CEILING PLAN FOR CEILING HEIGHT VARIATIONS AND SOFFIT DETAILS. EXPOSED CONCRETE TO RECEIVE SEALER AND DUSTPROOFER, AS APPROVED BY THE LOCAL
2. INSTALL WATER RESISTANT GYPSUM BOARD, TAPED, SPACKLED, SANDED AND PAINTED AT TOILET ROOMS, JANITOR, BREAK ROOM, SINK WALL
3. SUSPENDED T–BAR CEILING WHERE OCCURS SHALL BE 2x2 OR 2x4 "PRELLUDE" 15/16" WITH ANGLED TEGULAR "CIRRUS 75" LAY–IN TILE BY ARMSTRONG.
4. CONTRACTOR TO SUBMIT MATERIAL SAMPLES OF ALL FINISHES FOR ARCHITECT'S APPROVAL AND CONFIRMATION PRIOR TO INSTALLATION
5. USE STRAIGHT RESILIENT BASE IN ALL CARPETED AREAS AND COVED RESILIENT BASE IN AREAS WITH RESILIENT FLOORING. CONTRACTOR SHALL SCORE BACK BASE AT CORNERS. THE CONTRACTOR SHALL MITER INSIDE CORNERS. THE MATERIAL SHALL BE ORDERED AND INSTALLED IN A MANNER THAT MINIMIZES SEAMS AND VISIBLE JOINTS. RESILIENT BASE TO BE COIL TYPE. 120 INCHES IN LENGTH. REMOVE ANY EXCESS ADHESIVE OR BLEMISHES AFTER INSTALLATION USING MANUFACTURER'S RECOMMENDED CLEANER
6. REFER TO ALL TRANSITION AND THRESHOLD DETAILS. ALL FLOOR TRANSITIONS SHALL OCCUR AT THE CENTER LINE OF THE DOOR, UNLESS NOTED OTHERWISE. PROVIDE AND INSTALL RESILIENT REDUCER STRIP WHERE CARPET MEETS RESILIENT FLOORING. RESILIENT STRIP TO MATCH RESILIENT BASE, UNLESS NOTED OTHERWISE
7. CONTRACTOR SHALL FLASH PATCH AND PREPARE FLOOR SLAB FOR INSTALLATION OF SPECIFIED FLOOR COVERING MATERIALS. REFER TO MANUFACTURER'S SPECIFICATIONS FOR PROPER PREPARATION. NOTIFY ARCHITECT OF SLAB LEVEL VARIES MORE THAN 1/8" IN 10'–0". REPAIR MINOR HOLES, CRACKS, DEPRESSIONS AND ROUGH AREAS USING MATERIAL RECOMMENDED BY FLOORCOVERING AND ADHESIVE MANUFACTURER
8. SUBMIT SHOP DRAWINGS AND SEAMING DIAGRAMS INDICATING LOCATIONS AND LAYOUT OF ALL FLOORCOVERINGS. SHOP DRAWING SHOULD CLEARLY INDICATE FLOOR COVERING DIRECTION AND TYPES OF EDGE STRIPS. INDICATE COLUMNS, DOORWAYS, ENCLOSING WALL/PARTITIONS, BUILT–IN CABINETS AND LOCATIONS WHERE CUTOUTS ARE REQUIRED IN FLOORING. SHOW INSTALLATION DETAILS AT ANY SPECIAL CONDITIONS INCLUDING FLOOR PATTERNS AND TRANSITION DETAILS. DIAGRAMS MUST IDENTIFY CHANGES IN DYE LOT BATCHES OR SIMILAR COLOR SHIFTS. MINIMIZE DYE LOTS OF ALL TYPES OF CARPET. SHOP DRAWINGS MUST BE SUBMITTED TO ARCHITECT FOR APPROVAL PRIOR TO INSTALLATION
9. ALL CARPET TO BE INSTALLED DIRECT GLUE METHOD (NO PAD UNLESS OTHERWISE NOTED)
10. ALL EXPOSED EDGES OR CORNERS ON ALL GYPSUM WALLBOARD CONSTRUCTION SHALL RECEIVE A METAL CORNER BEAD, TAPED WITH TWO MUD COAT SAND SANDED SMOOTH, UNLESS OTHERWISE NOTED
11. ALL CEILING REGISTERS, VENTS, GRILLES, ETC. SHALL BE PAINTED TO MATCH COLOR OF ADJACENT SURFACES AS REQUIRED
12. PAINT ALL FIRE EXTINGUISHER CABINETS AND ENCLOSURES SEMI GLOSS TO MATCH ADJACENT WALL
13. ALL DOORS SHALL BE UNDERCUT TO CLEAR FINISHED FLOOR AT ALL POINTS OF DOOR SWING ARCH – 1/4 INCH CLEAR MAXIMUM. THE CONTRACTOR SHALL VERIFY HEIGHT OF FINISHED FLOORING MATERIAL PRIOR TO INSTALLATION OF DOORS OR MODIFYING DOOR UNDERCUTS
14. SUBMIT MANUFACTURER'S PRINTED INSTRUCTIONS AND MAINTENANCE OF INSTALLED WORK, INCLUDING METHODS OF FREQUENCY RECOMMENDED FOR MAINTAINING OPTIMUM CONDITIONS UNDER ANTICIPATED TRAFFIC CONDITIONS. INCLUDE PRECAUTIONS AGAINST MATERIALS AND METHODS WHICH MAY BE DETRIMENTAL TO FINISHES AND PERFORMANCE. SUBMIT FLOORCOVERINGS, WALLCOVERINGS AND ALL OTHER FINISHES AS NECESSARY
   a. TAKE–OFF QUANTITIES: THE RESPECTIVE INSTALL SHALL VERIFY DIMENSIONS TO ASSURE SUFFICIENT QUANTITIES OF MATERIAL TO COMPLETE THE WORK
   b. COLOR CONTINUITY: THE RESPECTIVE INSTALLER SHALL ADVISE ARCHITECT OF LOCATIONS OF CHANGES IN DYE LOTS, BATCHES OR SIMILAR COLOR SHIFTS
   c. INSPECTIONS: UPON RECEIPT FROM MANUFACTURER, THE INSTALLER SHALL INSPECT ALL MATERIALS FOR DEFECTS, FLAWS SHIPPING DAMAGE, CORRECT COLOR AND PATTERN. IN ADDITION, THE RESPECTIVE INSTALLER SHALL PROVIDE ARCHITECT WITH TWO (2) 3–INCH SQUARE SAMPLES FROM THE MATERIALS RECEIVED FOR WRITTEN VERIFICATION AND ACCEPTANCE. DAMAGE OR WRONG MATERIALS SHALL BE RETURNED FOR IMMEDIATE REPLACEMENT
15. QUALITY STANDARDS: ALL FINISHES SHALL BE INSTALLED IN ACCORDANCE WITH THEIR RESPECTIVE MANUFACTURER'S SPECIFICATIONS AND INSTRUCTIONS
16. BUILDING CODE UNLESS OTHERWISE SPECIFIED, ALL FINISHES SHALL MEET MAXIMUM FLAME SPREAD CLASS III. FLAME SPREAD CLASSIFICATION BETWEEN 76–200
17. INSTALLATION OF FINISHES: DO NOT COMMENCE UNTIL SURFACE CONDITIONS ARE WITHIN MANUFACTURER'S TOLERANCES REQUIRED AND ARE FREE OF DEFECTS THAT MAY PREVENT PROPER INSTALLATION. STARTING OF INSTALLATION IMPLIES ACCEPTANCE OF AND RESPONSIBILITY FOR SURFACES
18. ANY DISCREPANCIES IN MATERIAL SPECIFICATIONS OR QUESTIONS SHOULD BE BROUGHT TO THE ATTENTION OF THE ARCHITECT
19. FLAME SPREAD RATINGS FOR INTERIOR FINISHES NOT TO EXCEED AS FOLLOWS:
   * VERTICAL SHAFTS – 25
   * CORRIDORS AND LOBBIES – 75
   * ALL OTHER AREAS – 200

THE COSMIC OFFICE EXTERIOR SIDE WALLS ARE INTENDED TO REPLICATE AS CLOSE AS POSSIBLE THE EXISTING LIBRARY LIMESTONE PANEL APPEARANCE. THE CONTRACTOR SHALL SUBMIT FINISH SAMPLES FOR REVIEW BY ARCHITECT.

METAL STUDS FORMING THE EXTERIOR WALL OF THE MAIN DOME STRUCTURE SHALL BE ALLIGNED WITH THE INSIDE FACE OF STEEL COLUMNS. 6 INCH WIDE STUDS ARE SHOWN WHICH WILL PROTRUDE APPROXIMATELY $\frac{1}{2}$ INCH FROM THE TUBULAR STEEL COLUMN(S). THE CONTINUOUS FABRICATED TENSION RING AT THE BASE OF THE DOME MUST BE PRECISELY 22'–2" IN DIAMETER MEASURED TO THE OUTSIDE FACE WITH THE ANCHOR BOLT RING PRECISELY LOCATED IN ACCORDANCE WITH THE DOME MANUFACTURER'S SPECIFIC PRINTED INSTRUCTIONS AND DETAILS.

THE STATE OF CALIFORNIA REQUIRES PROPER SEISMIC ANCHORAGE OF DOME TO STRUCTURE. THE DOME MANUFACTURER(S) MUST BE CERTIFIED MEETING THE STATE'S STRUCTURAL CODE COMPLIANCE CRITERIA. THE GENERAL CONTRACTOR MUST PROVIDE ENGINEERING CALCULATIONS AND DETAILS PROVING LATERAL RESISTANT ATTACHMENT(S).

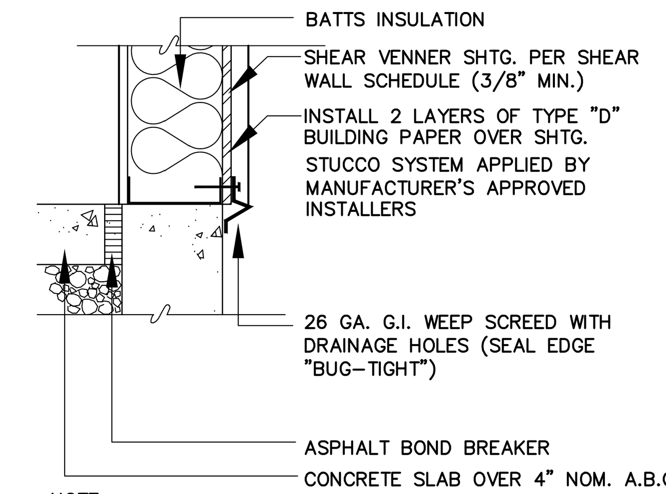

NOTE:
SEE FOUNDATION PLAN AND STRUCTURAL DETAILS FOR ANCHOR BOLT REQUIREMENTS AND AND STUD TO PLATE CONNECTION

SCALE: N.T.S.

WALL BASE 1

WHERE FIRE RATED WALL ASSEMBLY OCCURS COMPLY WITH DETAIL1, SHEET T4

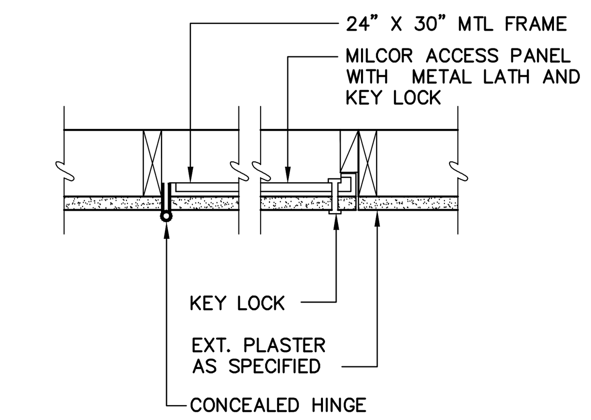

SCALE: N.T.S.

CEILING ACCESS 2

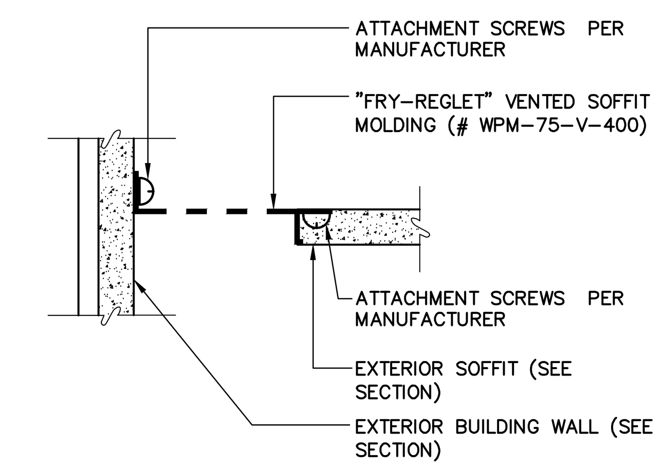

SCALE: N.T.S.

SOFFIT VENT 3

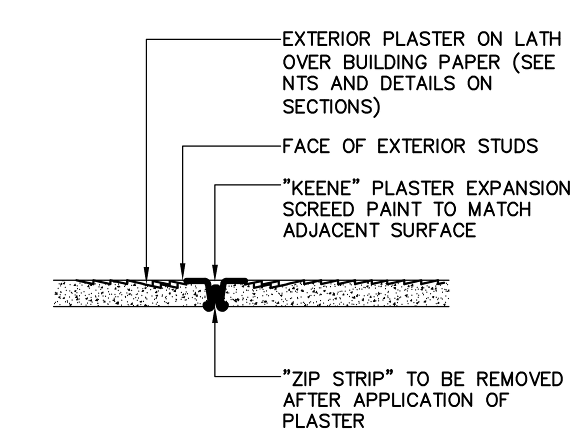

SCALE: N.T.S.

PLASTER EXPANSION JOINT 4

Narkweather ARCHITECTS INC.
73 330 HWY 111, SUITE A / PALM DESERT, CA 92260–4016
PHONE: (760) 346–4090 / E–MAIL: info@narkweather.net

OWNERSHIP OF DOCUMENTS
DRAWINGS AND SPECIFICATIONS AS INSTRUMENTS OF SERVICE ARE AND SHALL REMAIN THE PROPERTY OF THE DESIGNER WHETHER THE PROJECT FOR WHICH THEY WERE PREPARED IS EXECUTED OR NOT. THEY ARE NOT TO BE USED ON OTHER PROJECTS OR EXTENSIONS TO THIS PROJECT EXCEPT BY AGREEMENT IN WRITING AND WITH APPROPRIATE COMPENSATION TO Narkweather Architects Inc.
COPYRIGHT 2016 Narkweather Architects

CITY OF RANCHO MIRAGE

PROJECT DESCRIPTION: O B S E R V A T O R Y
Rancho Mirage Public Library

SITE ADDRESS: 71–100 California 111, Rancho Mirage, CA 92270

SHEET CONTENT
ACCESSIBILITY COMPLIANCE AND FINISH NOTES/DTLS.

DRAWING SCALE:
SCALE: (NONE)

ISSUE DATE

MONTH	DAY	YEAR
SEPT.	29	2016

1	REVISION DATE:
2	REVISION DATE:
3	REVISION DATE:
	REVISION DATE:
	REVISION DATE:

(PLAN CHECK ENGINEER STAMP)
RECOMMENDED FOR APPROVAL BY:
LELAND E. COLE 9/27/16 DATE
R.C.E. 47159 EXP. 12/31/17
APPROVED BY CITY OF RANCHO MIRAGE:
WILLIAM A. ENOS, CITY ENGINEER
R.C.E. 43910, EXP. 6/30/2017
DATE

DRAWING NUMBER
G3
SHEET # 7 OF 56
PRIVATE REFERENCE #
CITY REFERENCE #

Bid Set - 10/07/2016

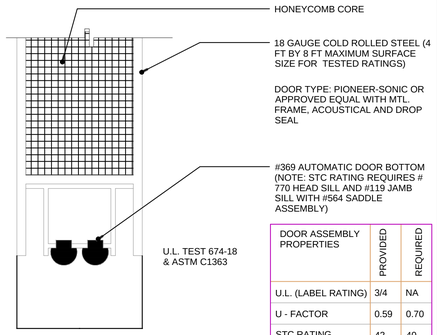

DOOR ASSEMBLY PROPERTIES	PROVIDED	REQUIRED
U.L. (LABEL RATING)	3/4	NA
U - FACTOR	0.59	0.70
STC RATING	42	40

1 HOLLOW METAL DOOR BTM.

NOTE: REFER TO SPECIFICATIONS FOR (4) PLY B.U. ROOFING SYSTEM BY GAF OR SUBMIT PRODUCT INFORMATION FOR REVIEW AND APPROVAL PRIOR TO INSTALLATION.

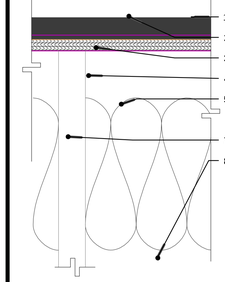

ASSEMBLY TYPE:	Roof Assembly Properties	
FRAMING MATERIAL wood	R-VALUE	
ASSEMBLY COMPONENTS	Cavity Rc	Frame Rf
OUTSIDE AIR FILM	0.17	*
BUILT-UP ROOFING ASSEMBLY	0.24	*
O.S.B. SHTG. (W/ RADIENT BARRIER)	0.63	*
2 INCH AIR SPACE	1.00	*
R-30 BLOWN-IN CELLULAR INSULATION	30.0	*
METAL JOISTS	-	*
INSIDE AIR FILM	0.61	*
SUBTOTAL	32.65	

* NEGLIGIBLE W/ FOAM 0.034 Report Factor

$\frac{1}{32.65} = 0.030$ (Assembly U-Factor)

PRESCRIPTIVE COMPARISON Max allowed U-Factor 0.031

S.T.C. = 51 REQUIRED S.T.C. = 40

2 COSMIC OFFICE ROOF

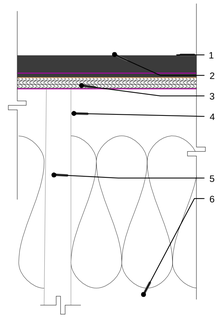

ASSEMBLY TYPE:	Roof Assembly Properties	
FRAMING MATERIAL wood	R-VALUE	
ASSEMBLY COMPONENTS	Cavity Rc	Frame Rf
INSIDE AIR FILM	0.61	*
FINISH FLOORING MATERIAL	0.24	*
O.S.B. SHTG.	0.95	*
CELLULAR BLOWN INSULATION	30.00	*
		*
METAL JOIST FRAMING	-	*
OUTSIDE AIR FILM	0.17	*
SUBTOTAL	32.65	*

* NEGLIGIBLE W/ FOAM 0.034 Report Factor

$\frac{1}{32.65} = 0.030$ (Assembly U-Factor)

PRESCRIPTIVE COMPARISON Max allowed U-Factor 0.031

S.T.C. = 51 REQUIRED S.T.C. = 40

3 COSMIC OFFICE FLOOR

0.161 Report Factor
U - FACTOR

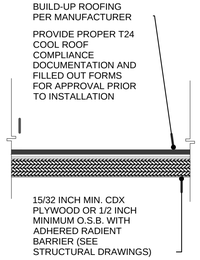

Roof Material Properties	PROVIDED	REQUIRED
RADIENT BARRIER (CERTIFIED BY THE DEPARTMENT OF CONSUMER AFFAIRS AND TESTED IN ACCORDANCE WITH ASTM C1371)		
SYSTEM CLASS: U.L. 790	B	C
BASE LAYER TYPE	X	X
TOP COAT	X	X
ASSEMBLY DEAD LOAD psf	1.0	5 max
THERMAL EMITTANCE	0.83	0.75
S.R.I. VALUE: Initial rating		75 min
S.R.I. VALUE: 3 yr. rating (T24 REPORT)	63	67 min
SOLAR REFLECTANCE: Initial rating		0.83 min
AGED SOLAR REFLECTANCE: 3 yr. rating		0.63 min
COATING V.O.C.	50	50
MEMBRANE V.O.C.	450	450
SEALANT V.O.C.	500	500
FORMALDEHYDE IN SHTG.	0.05	0.05

4 COSMIC OFFICE COOL ROOF

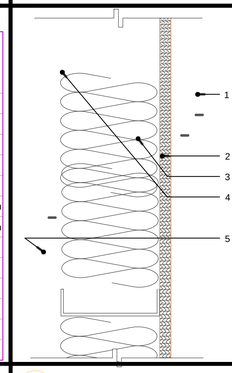

ASSEMBLY TYPE:	Wood Studs at 16 inches on center	
FRAMING MATERIAL metal	R-VALUE	
ASSEMBLY COMPONENTS	Cavity Rc	Frame Rf
OUTSIDE AIR FILM	0.17	*
MASONRY WALL	1.45	*
SUBSTRATE	0.66	*
OPEN CELL FOAM INSULATION	35	*
3.5" METAL STUDS	-	*
6" METAL STUDS AT OBSERVATORY		
INSIDE AIR FILM	0.68	*
SUBTOTAL	37.96	*

* NEGLIGIBLE W/ FOAM 0.161 Report Factor

$\frac{1}{37.96} = 0.026$ (Assembly U-Factor)

0.026 < Required U-Factor = 0.059 o.k

S.T.C. = 54 REQUIRED S.T.C. = 40

5 COSMIC OFFICE INTERIOR WALL

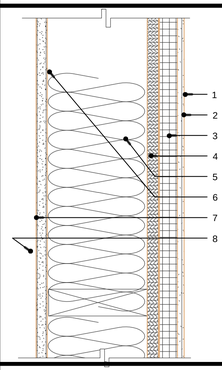

ASSEMBLY TYPE:	METAL STUDS	
FRAMING MATERIAL metal	R-VALUE	
ASSEMBLY COMPONENTS	Cavity Rc	Frame Rf
OUTSIDE AIR FILM	0.17	*
3/8 INCH 2 COAT STUCCO	0.08	*
3 INCH, R4 EPS INSULATING SHTG.	11.0	*
O.S.B. CDX SHTG.	0.66	*
OPEN CELL FOAM INSULATION	21	*
METAL STUDS	-	*
5/8 INCH GYPSUM BOARD	0.56	*
INSIDE AIR FILM	0.68	*
SUBTOTAL	26.85	*

* NEGLIGIBLE W/ FOAM 0.161 Report Factor

$\frac{1}{26.85} = 0.037$ (Assembly U-Factor)

0.037 < Required U-Factor = 0.059 o.k

S.T.C. = 54 REQUIRED S.T.C. = 40

6 COSMIC OFFICE EXTERIOR WALL

WHERE FIRE RATED WALL ASSEMBLY OCCURS COMPLY WITH DETAIL1, SHEET T4

SPRAYED POLYURETHANE FOAM (SPF) HAS AN AGED R-VALUE OF APPROXIMATELY 6.0 PER 1 INCH THICKNESS PROVIDING MORE THERMAL RESISTANCE W/ LESS MATERIAL THAN OTHER COMMERCIAL INSULATION MATERIAL. OPEN-CELL SPF INSULATION IS INTENDED AS CAVITY INSULATION INSIDE EXTERIOR AND INTERIOR WALLS AND IN THE FLOOR AND ROOF FRAMING BAYS. THE VALUES SHOWN ARE THE MINIMAL EFFECTS IN LIEU OF ACTUAL WHEN THE ENTIRE BAY CAVITY IS FILLED TO CAPACITY.

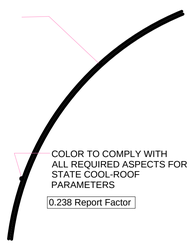

Roof Material Properties	PROVIDED	PERSCRIPTIVE / PERFORMANCE
SYSTEM CLASS: U.L. 790	B	C
BASE LAYER TYPE	X	X
TOP COAT	X	X
ASSEMBLY DEAD LOAD psf	1.0	5 max
THERMAL EMITTANCE	0.83	0.75
S.R.I. VALUE: Initial rating		75 min
S.R.I. VALUE: 3 yr. rating (T24 REPORT)	63	67 min
SOLAR REFLECTANCE: Initial rating		0.83 min
AGED SOLAR REFLECTANCE: 3 yr. rating		0.8 min
COATING V.O.C.	50	50
MEMBRANE V.O.C.	450	450
SEALANT V.O.C.	500	500

7 DOME COOL ROOF

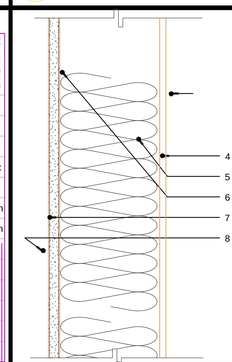

ASSEMBLY TYPE:	Wood Studs at 16 inches on center	
FRAMING MATERIAL metal	R-VALUE	
ASSEMBLY COMPONENTS	Cavity Rc	Frame Rf
OUTSIDE AIR FILM	0.17	*
METAL VENEER	0.66	*
OPEN CELL FOAM INSULATION	21	*
METAL STUDS	-	*
SUBSTRATE	0.56	*
INSIDE AIR FILM	0.68	*
SUBTOTAL	23.07	

* NEGLIGIBLE W/ FOAM 0.161 Report Factor

$\frac{1}{23.07} = 0.043$ (Assembly U-Factor)

0.043 < Required U-Factor = 0.059 o.k

S.T.C. = 54 REQUIRED S.T.C. = 40

8 OBSERVATORY / TOILET WALL

NOTE: INFORMATION CONTAINED HEREIN IS FOR GENERAL STATE TITLE 24 ENERGY AND CAL GREEN COMPLIANCE INFORMATION SPECIFICS ARE SHOWN ON PLANS, SCHEDULES, SECTIONS, AND DETAILS.

**** ENVIRONMENTAL QUALITY

1 Basis of Design: 2013 CEC California Building Climate Zone 10.

2 VOC Limits: Comply with adhesive VOC limits in CAL Green Table 5.504.4.1. Comply with sealant VOC limits specified in Table 5.504.4.2. VOC Content limits for architectural coatings are indicated in Table 5.504.4.3. Finish materials must also be in adherence with Sections 5.504.4.1 through 5.504.4.4. All adhesives, bonding primers, sealants and caulks must comply with regional air pollution control or air quality management district rules where applicable or SCAQMD Rule 1168 VOC limits, as shown in CGBC Tables 5.504.4.1 and 5.504.4.2. Aerosol adhesives and smaller unit sizes of adhesives and sealants or caulking compounds shall comply with statewide VOC standards including prohibitions on use of certain toxic compounds, of California Code of Regulations, Title 17, commencing with Section 94507.

3 Ozone Depletion and Greenhouse Gas Reductions Installations of HVAC, refrigeration, and fire suppression equipment shall comply with California Mechanical Code Sections...
5.508.1.1 Chlorofluorocarbons (CFCs). Install HVAC, refrigeration & fire suppression equipment that do not contain CFC.
5.508.1.2: Install HVAC, refrigeration & fire suppression equipment that do not contain Halon.

4 Refrigerant Piping: Piping compliant with the California Mechanical code shall be installed to be accessible for leak protection and repairs. Piping runs using threaded pipe, copper tubing with an outside diameter (OD) less than ¼", flared tubing connection and short radius elbows shall not be used in refrigerant systems except as noted below.
5.508.2.1.1 Treaded pipe.
Threaded connections are permitted at the compressor rack.
5.508.2.1.2 Copper pipe. Copper tubing with an OD less than ¼" may be used in systems with a refrigerant charge of 5 pounds or less.
5.508.2.1.2.1 Anchorage. ¼" OD tubing shall be securely clamped to a rigid base to keep vibration levels below 8 mils.
5.508.2.1.3 Flared tubing connections.
Double-flared tubing connections may be used for pressure controls, valve pilot lines and oil.
Exception: Single-flared tubing connections may be used with a multi-ring seal coated with industrial sealant suitable for use with refrigerants and tightened in accordance with manufacturer's recommendations.
5.508.2.1.4 Elbows. Short radius elbows are only permitted where space limitations prohibit use of long radius elbows.

5 Pressure Testing: The systems shall be pressure tested during installation prior to evacuation & charging. 5.508.2.5.1 Minimum pressure. The system shall be charged with regulated dry nitrogen and appropriate tracer gas to bring system pressure up to 300 psig minimum.
5.508.2.5.2 Leaks. Check the system for leaks, repair any leaks, and retest for pressure using the same gauge. 5.508.2.5.3 Allowable pressure change. The system shall stand, unaltered, for 24 hours with no more than a +/- one pound pressure change from 300 psi, measured with the same gauge.

6 Refrigerant Valves: Valves and fittings shall comply with the California Mechanical Code and as follows:5.508.2.2.1 Pressure relief valves. For vessel containing high-GWP refrigerant, a rupture disc shall be installed between the outlet of the vessel and the inlet the pressure relief valve.
5.508.2.2.1.1 Pressure detection. A pressure gauge, pressure transducer or other device shall be installed in the space between the rupture disc and the relief valve inlet to indicate a disc rupture or discharge of the relief valve. 5.508.2.2.2 Only Schrader access valves with a brass or steel body are permitted for use. 5.508.2.2.2.1 Valves caps. For systems with a refrigerant charge of 5 pounds or more, valve caps shall be brass or steel and not plastic. 5.508.2.2.2.2 Seal caps. If designed for it, the cap shall have a neoprene O-ring in place. 5.508.2.2.2.2.1 Chain tethers to fit over the stem are required for valves designed to have seal caps. Exceptions: Valves with seal caps that are not removed from the valve during stem operation.

7 Environmental Tobacco Smoke (ETS) Control: Prohibit smoking within 25 feet of building entries, outdoor air intakes and operable windows where outdoor areas are provided for smoking and within the building as already prohibited by other laws or regulations; or as enforced by ordinances, regulations or policies of any city, county, city and county, California Community College, campus of the California State University or campus of the University of California, whichever are more stringent.

8 Indoor Moisture Control: Buildings shall meet or exceed the provisions of 2013 California Building Code, CCR, Title 24, Part 2, Sections 1203 (Ventilation) and Chapter 14 (Exterior Walls).

9 Resilient flooring system shall be certified under the Resilient Floor Covering Institute (RFCI) Floor-Score program and compliant with the VOC-emissions limits and testing requirements specified in the California Department of Public Health's 2010 Standard method for the Testing and Evaluation Chambers, version 1.1, February 2010. Documentation shall be provided verifying that resilient flooring materials meet the pollutant emission limits.

10 FILTERS: Provide regularly occupied areas of buildings with air filtration media for outside and return air that provides at ' Value (MERV) of 8. Filters must be installed prior to occupancy. An ASHRAE 10-percent to 15-percent efficiency filter for 60,000 Btu/h or less capacity per fan coil, if the energy use of the air delivery system is 0.4 W/cfm or less at design air flow. Installed filters shall be clearly labeled by the manufacturer indicating the MERV rating. If a HVAC system is used during construction, use return air filters with a MERV of 8, based on ASHRAE 52.2-1999, or an average efficiency of 30 percent based on ASHRAE 52.1-1992. Replace all filters immediately prior to occupancy.

11 Dust Protection: At the time of rough installation and during storage on the construction site and until final startup of the heating, cooling and ventilating equipment, all duct and other related air disturbing component openings shall be covered with tape, plastic, sheet metal or other methods acceptable to the enforcing authority to reduce amount of dust, water and debris which may enter the system.

12 Paints and coatings must comply with Table 5.504.4.3 unless more stringent local limits apply. Aerosol paints and coatings shall meet the Product-Weighted MIR Limits for ROC in Section 94522(a)(3) and other requirements, including prohibitions on use of certain toxic compounds and ozone depleting substances.

13 Radon: Buildings must meet the provisions of California Building Code, CCR, Title 24, Part 2, Sections 1203 and Chapter 14.1 for indoor moisture and radon control.

14 Wood Products: Hardwood plywood, particleboard and medium density fiberboard composite wood products used on the interior or exterior of the building shall meet the requirements for formaldehyde as specified in ARB's (Air Toxic Control Measure (ATCM) for Composite Wood (17 CCR 93120 et seq.). Those materials not exempted under the ACTM must meet the specified emission limits, as shown in the Table 5.504.4.5. Documentation is required per 5.504.4.5.3. Verification of compliance with this section shall be provided as requested by the enforcing agency. Documentation shall include at least one of the following.

1. Product certifications and specifications
2. Chain of custody certifications
3. Product labeled and invoiced as meeting the Composite Wood Products regulation (see CCR, Title 17, Section 93120, et seq.)
4. Exterior grade products marked as meeting the PS-1 or PS-2 standards of the Engineered Wood Association, the Australian AS/NZS 2269 or European
5. 636 3S standards.
6. Other methods acceptable to the enforcing agency.

**** ADMINISTRATION

1 A written summary has been prepared by the owner outlining the expectations and project requirements. The OPR (owner's project requirements) is flexible.

2 Written explanations are included that answers and clarifies all requirements set forth in the OPR, located in the CAL Green attachment section inside the Project Manual. The BOD (basis of design) covers

- HVAC systems per 2013 California Energy Code, Section 120.8(c)
- Indoor lighting systems and controls per section 120.8(c)
- Water heating system(s) per section 120.8(c)
- Renewable energy systems
- Landscape irrigation system
- Water reuse systems

3 Certificate(s) of Installation are compliance forms that are filled out and signed by the responsible licensed person for regulated energy feature assemblies. A copy of the completed, signed, and dated form must be posted at the building site for review by the local enforcement authority. Note: Forms are included on the CEC web-site. All installation forms are required to be included in the registered documents from an approved non-residential data registry.

4 Acceptance Tests are required for certain lighting, HVAC controls, air ducts, envelope features, and equipment requiring calibration. Technicians conducting acceptance testing are required to be trained and certified by an approved ATTCP (Acceptance Test Technician Certification Provider). Acceptance tests include:

Mechanical: all systems
Indoor Lighting: Controls
Outdoor Lighting: all sensors and controls

5 Acceptance tests are required to be documented using applicable acceptance forms (examples are included on the CEC web-site). Submit to the local enforcement authority to demonstrate compliance. Content and format to be approved by the Energy Commission.

6 Registration of all Certificates of Compliance is required. The builder, and design professional(s) must submit to the enforcement agency a REGISTERED copy of all required forms and reports stamped and certified from a California approved non-residential data registry outlet. The Certificate of Compliance is assigned a unique number, then copies of the stamped forms become available and authorized for use in making electronic and paper copies for submittal to the local authority. Required forms are available to be filled out, recorded, certified, and submitted to local governing authority by downloading from the CEC website or using the included forms in the Project Manual (per the CEC Standards Table 2-10 which include): Design review: (5) CXR forms; Envelope: (5) ENV forms; Mechanical: (5) MCH forms; Lighting: (5) LTI forms; Outdoor Lighting: (2) LTO forms; Sign Lighting:(1) LTS-01 form; Solar: (2) SRA forms; Electrical: (1) ELC form; Plumbing: (1) PLB form

**** MANDATORY ENVELOPE MEASURES

1 Spray insulating foam into crevices between the sill plate and concrete slab (if caulk is not used). Choose a foam product that has water-proofing properties as well as insulating properties.

2 A "blower-test" shall identify air leakage paths so that they can be sealed using an appropriate material. Products available for sealing includes caulks, foams, weatherstripping, gaskets, and door sweeps.

3 Install caulking and sealant with care to seal all joints without excess. Care must be exercised during removal of excess sealant after hardeing to avoid damage or removal of the required sealant.

4 Seal top plate penetrations (where plumbing, electrical, cable, conduits, etc. occur).

5 Weather-strip exterior doors and all openings between conditioned and unconditioned areas.

6 Seal wall penetrations of HVAC and plumbing equipment.

Narkweather ARCHITECTS INC.
73 330 HWY 111, SUITE A / PALM DESERT, CA 92260-4016
PHONE: (760) 346-4000 / E-MAIL: info@narkweather.net

OWNERSHIP OF DOCUMENTS
DRAWINGS AND SPECIFICATIONS AS INSTRUMENTS OF SERVICE ARE AND SHALL REMAIN THE PROPERTY OF THE DESIGNER WHETHER THE PROJECT FOR WHICH THEY WERE PREPARED IS EXECUTED OR NOT. THEY ARE NOT TO BE USED ON OTHER PROJECTS OR EXTENSIONS TO THIS PROJECT EXCEPT BY AGREEMENT IN WRITING AND WITH APPROPRIATE COMPENSATION TO Narkweather Architects Inc.
COPYRIGHT 2016 Narkweather Architects

CITY OF RANCHO MIRAGE

OBSERVATORY

PROJECT DESCRIPTION: Rancho Mirage Public Library

SITE ADDRESS: 71-100 California 111, Rancho Mirage, CA 92270

SHEET CONTENT

ENVELOPE ASSEMBLIES

DRAWING SCALE:
SCALE: (NONE)

ISSUE DATE		
MONTH	DAY	YEAR
SEPT.	29	2016

1 REVISION DATE:
2 REVISION DATE:
REVISION DATE:
REVISION DATE:
REVISION DATE:

(PLAN CHECK ENGINEER STAMP)

RECOMMENDED FOR APPROVAL BY:
LELAND E. COLE 9/27/16
R.C.E. 47159 EXP. 12/31/17 DATE
APPROVED BY CITY OF RANCHO MIRAGE:
WILLIAM A. ENIS, CITY ENGINEER DATE
R.C.E. 43910, EXP. 6/30/2017

DRAWING NUMBER
G4
SHEET # 8 OF 56
PRIVATE REFERENCE #
CITY REFERENCE #

Bid Set - 10/07/2016

CAL Green **Mandatory Requirements**

ADMINISTRATIVE

☑A1 Basis of Design: 2013 CEC California Building Climate Zone 15.

☑A2 A written explanation has been prepared by the owner outlining the expectations and project requirements. The **OPR** (owner's project requirements) has been reviewed and implemented into this project.

☑A3 Written explanations are included that answers and clarifies all requirements set forth in the **OPR**. The **BOD** (basis of design) covers

- HVAC systems per 2013 California Energy Code, Section 120.8(c)
- Indoor lighting systems and controls per section 120.8(c)
- Water heating system(s) per section 120.8(c)
- Renewable energy systems
- Landscape irrigation system
- Water reuse systems

☑A4 Testing and adjusting of systems are required. A **written procedures plan shall be prepared by the builder** and approved by the architect. Perform testing and adjustments in accordance with applicable standards on each system as determined by the enforcing agency.

1. HVAC balancing required in accordance with the procedures defined by national standards listed in Section 5.410.4.3.1 or as approved by local authority.
2. After completing testing, adjusting, and balancing; provide a final report of testing signed by the responsible individual performing the services.
3. Provide the building owner with detailed operating and maintenance instructions and copies of guarantees / warranties for each system prior to final inspection.
4. Before a space-conditioning system is placed in operation, balance in accordance with procedures defined by national standards listed in CAL Green Section 5.410.4.3.1 or as approved by the enforcement agency.
5. Reports shall include a copy of all inspection verifications required by the local authority or enforcement agency.

☑A5 Certificate(s) of Installation are compliance forms that are filled out and signed by the responsible licensed person for regulated energy feature assemblies. A copy of the completed, signed, and dated form must be posted at the building site for review by the local enforcement authority.

☑A6 Acceptance Tests are required for certain lighting, HVAC controls, air ducts, envelope features, and equipment requiring calibration. Technicians conducting acceptance testing are required to be trained and certified by an approved ATTCP (Acceptance Test Technician Certification Provider). Acceptance tests include:

Site-Built Fenestration (storefront assemblies)
Mechanical: all systems
Indoor Lighting: Controls
Outdoor Lighting: all sensors and controls

Acceptance tests are required to be documented using applicable acceptance forms (examples are included in the project manual). Submit to the local enforcement authority to demonstrate compliance; content and format to be approved by the Energy Commission.

☑A7 Administrative requirements contained in the Standards require the lighting plans and specifications to contain:

1. Completed acceptance testing forms for automatic daylighting controls, manual daylight switching, occupant sensing devices and automatic shut-off controls.
2. Record drawings are provided to the building owners within 90 days of receiving a final occupancy permit.
3. Operating and maintenance information be provided to the building owner.
4. Requirement for the issuance of installation certificates for daylighting controls, occupant sensing devices and automatic shut-off controls.

Note: The plans and specifications require automatic shut-off lighting controls. Understanding the construction inspection requirements for manual or automatic daylighting controls (NA7.6.3 and NA7.6.1) will prevent expensive rewiring if the circuiting requirements are understood prior to installing. A construction inspection would verify the device location and wiring is complete. Acceptance tests would verify proper zoning, on-off functions and overrides to assure the shut-off system is properly functioning. Owners' manuals and maintenance information would be prepared for delivery to the building owner. Finally, record drawing information, including programming information for the automatic shut-off lighting controls must be submitted to the building owner within 90 days of the issuance of a final occupancy permit.

ENVIRONMENTAL QUALITY

☑B1 Comply with adhesive VOC limits in CAL Green Table 5.504.4.1. Comply with **sealant VOC limits** specified in Table 5.504.4.2. VOC Content limits for architectural coatings are indicated in Table 5.504.4.3. Finish materials must also be in adherence with Sections 5.504.4.1 through 5.504.4.4.

☑B2 Resilient flooring system shall be certified under the Resilient Floor Covering Institute **(RFCI)** *FloorScore* **program** and compliant with the VOC-emissions limits and testing requirements specified in the California Department of Public Health's 2010 Standard method for the Testing and Evaluation Chambers, version 1.1, February 2010.

☑B3 Provide regularly occupied areas of buildings with air filtration media for outside and return air that provides at least a Minimum Efficiency Reporting Value (MERV) of 8. Filters must be installed prior to occupancy. An ASHRAE 10-percent to 15-percent efficiency filter for 60,000 Btu/h or less capacity per fan coil, if the energy use of the air delivery system is 0.4 W/cfm or less at design air flow. Installed **filters shall be clearly labeled** by the manufacturer indicating the MERV rating.

☑B4 If a HVAC system is used during construction, use return air filters with a **MERV of 8**, based on ASHRAE 52.2-1999, or an average efficiency of 30 percent based on ASHRAE 52.1-1992. Replace all filters immediately prior to occupancy.

☑B5 At the time of rough installation and during storage on the construction site and until final startup of the heating, cooling and ventilating equipment, all duct and other related air disturbing component openings shall be covered with tape, plastic, sheet metal or other methods acceptable to the enforcing authority to **reduce amount of dust**, water and debris which may enter the system.

☑B6 All adhesives, bonding primers, sealants and caulks must comply with regional air pollution control or air quality management district rules where applicable or SCAQMD Rule 1168 VOC limits, as shown in CGBC Tables 5.504.4.1 and 5.504.4.2. Aerosol adhesives and smaller unit sizes of adhesives and sealants or caulking compounds shall comply with **statewide VOC standards** including prohibitions on use of certain toxic compounds, of California Code of Regulations, Title 17, commencing with Section 94507.

☑B7 Paints and coatings must comply with Table 5.504.4.3 unless more stringent local limits apply. Aerosol paints and coatings shall meet the Product-Weighted **MIR Limits for ROC** in Section 94522(a)(3) and other requirements, including prohibitions on use of certain toxic compounds and ozone depleting substances.

☑B8 Buildings must meet the provisions of California Building Code, CCR, Title 24, Part 2, Sections 1203 and Chapter 14.1 for **indoor moisture and radon control**.

☑B9 Verification of compliance with **pollutant control measures** may be enforced by local authority.

1. Product certifications and specifications.
2. Chain of custody certifications.
3. Product labeled and invoiced as meeting the Composite Wood Products regulations.

1. Exterior grade products marked as meeting the PS-1 or PS-2 standards of the Engineered Wood Association, the Australian AS/NZS 2269 or European 636 3S standards.

☑B10 Comply with local tobacco smoke (ETS) control. Post **signage at building entrances** to inform building occupants of the prohibitions.

☑B11 Demand Control Ventilation requires **CO2 sensors and controls** shall be installed and specified in accordance with 2013 California Energy Code, Section 120(c)(4).

☑B12 Comply with CAL Green Section 5.508 Ozone depletion, **greenhouse gas reductions**, chlorofluorocarbons (CFCs), and Halons.

☑B13 Establish a construction **waste management plan** for the diverted materials or meet local construction and demolition waste management ordinance, whichever is more stringent.

1. Recycle and/or salvage for reuse a **minimum of 50 percent** of the nonhazardous construction and demolition debris or meet a local construction and demolition waste management ordinance, whichever is more stringent. Calculate the amount of materials diverted by weight or volume, but not by both.
2. Excavated soil and land-clearing debris is exempt.
3. Alternate waste reduction methods developed by working with local agencies is an alternative compliance measure if diversion or recycle facilities capable of compliance with this item do not exist.

INSTALLER & SPECIAL INSPECTOR QUALIFICATIONS

☑C1 HVAC system **installers must be trained and certified** in the proper installation of HVAC equipment and systems including ducts by a nationally recognized program.

☑C2 When certification is required by California Title 24, Part 1, Section 10-103-B, the acceptance testing specified by Section 120.5(a) shall be performed by a certified mechanical acceptance test technician (CMATT). If the CMATT is operating as an employee, the CMATT shall be employed by a certified mechanical acceptance test employer. The CMATT shall disclose on the certificate of acceptance a valid **CMATT certificate identification number** issued by an approved acceptance test technician certification provider. The CMATT shall complete all certificate of acceptance documentation in accordance with the application requirements in Section 10-103(a)4.

☑C3 Note: **HERS raters** are special inspectors certified by the California Energy Commission (CEC) to rate homes in California according to the Home Energy Rating System.

☑C4 **Special inspectors** (independent entities with no project financial interests) may be required by the enforcement agency and shall be employed by the owner or responsible entity acting as the owner's agent to provide inspection or other duties necessary to substantiate compliance with CAL Green code.

☑C5 **Completed forms and worksheets** demonstrating environmental compliance are required.

SITE DEVELOPMENT

☑D1 Best Management Practices **(BMP)** shall be enforced by local authority to prevent the loss of soil through wind or water erosion by implementing an effective combination of erosion and sediment control. Key minimum requirements for minimum requirements for construction BMP's include:

1. Sufficient BMP's must be installed to prevent silt, mud, or other construction debris from being tracked into the adjacent street(s) or storm water conveyance systems due to construction vehicles or any other construction activity. The contractor shall be responsible for cleaning any such debris that may be in the street at the end of each work day or after a storm event that causes a breech in the installed construction BMP's.
2. All stock piles of un-compacted soil/or building materials that are intended to be left unprotected for a period greater than seven calendar days are to be provided with erosion and sediment controls. Such soil must be protected each day when the probability of rain is 40 percent or greater.
3. A concrete washout shall be provided on all projects which propose the construction of any concrete improvements that are to be poured in place on the site.
4. All erosion/sediment control devices shall be maintained in working order at all times.
5. All slopes that are created or disturbed by construction activity must be protected against erosion and sediment transport at all times.
6. The storage of all construction materials and equipment must be protected against any potential release of pollutants into the environment.

☑D2 Drawings and documentations demonstrate how site grading incorporates **drainage systems** which manages all surface water flows in such a way as to keep water from entering buildings.

☑D3 100 percent of trees, stumps, rocks and associated vegetation and soils resulting primarily from land clearing shall be **reused or recycled** (except vegetation or soil contaminated by disease or pest infestation). Refer to Civil drawings and notes for compliance verification.

☑D4 **Bicycle parking** is required within 200 feet of building entrance (see site plan).

☑D5 The General Contractor shall incorporate a **Waste Management Plan** identifying diversion facilities where the construction and demolition waste materials that are collected will be taken. The amount of waste materials that are diverted shall be calculated by weight or volume, but not by both. Verifiable documentation must comply with CAL Green Sections 5.408.1.1 through 5.408.1.3.

☑D6 The General Contractor shall identify and locate a covered refuse containment enclosure including a separate storage collection container utilized for **non-hazardous recycling materials**.

BUILDING ENVELOPE

☑E1 The front orientation of each building is accurately listed on the Certificate of Compliance and reflects how the building is situated on the site. The site-plan shows that the reference north is identical to true north. Thus the Front Orientation is not listed in degrees from North clockwise to East.

☑E2 The energy compliance documentation is developed from a certified compliance software for the 2013 Building Energy Efficiency Standards. The **performance approach** is used. Page 2 of the PERF-1 Form is generated by a compliant software program and states that the building complies with the state standards.

☑E3 All applicable Certificate(s) of Compliance and performance PERF-1 Form(s) are inserted in the plans. Refer to the drawing sheet-index for forms location. The local enforcement the California Energy Commission mandates that the Certificate(s) of Compliance and PERF-1 Form(s) be printed on the plans (electronically incorporated) to ensure that the energy documentation will not be lost in the field. The Energy Checklist will be used by the Field Inspector during each applicable stage of inspection to verify compliance with the Standards.

☑E4 A Solar Zone is required for building roofs. The building **Roof-Plan** describes the zone accessed by a mechanical equipment maintenance and repair route. The area shall be comprised of dimensions not less than five feet and no less than 80 square feet for buildings less than 10,000 square feet. The structural design roof dead loads are required to be indicated on the construction documents for future solar energy systems.

1. Electrical drawings demonstrate and indicate a location for inverters and metering equipment and pathways for routing conduit from the solar zone to the point of interconnection with the electrical service.
2. Plumbing drawings indicate a pathway for routing of plumbing from the solar zone to the water-heating system(s).
3. A copy of the construction documents shall be provided the occupant.
4. Electrical service panel shall have a reserved space to allow for the installation of a double pole circuit breaker for future electric installation. The reserved space shall be positioned at the opposite (load) end from the input feeder location or main circuit location. The reserve shall be permanently marked as "For Future Solar Electric."

☑E5 Cool Roof Values (Solar Reflectance and Thermal Emmitance):
All applicable mandatory measures for the roofing product(s) are specified on the plan and section details. The roofing product shall be certified by the Cool Roof Rating Council (CRRC). The builder must verify that the CRRC Product ID Number listed on the ENV-2C matches the CRRC-1 label included with the plan details. Minimum roof slope is ¼ inch per ft and less than 5 pounds per square feet of dead load. All low-sloped roof assemblies between conditioned and unconditioned areas, meet the minimum solar reflectance factor of 0.63 (aged reflectance) and the minimum thermal emittance of 0.75 or the minimum Solar Reflectance Index of 75. Section 07 52 00, Division 7, of the Specifications shows that the GAFGLAS Energy Cap BUR Mineral Surfaced Cap Sheet (white) by GAF (roofing) / exceeds the criteria based on CRRC-0676-0021 certification. **See Roof Plan**

☑E6 CGBC - 5.407.2.2.1 Exterior door(s) protection: Primary entrances only. Use nonabsorbent finishes within 2 feet of opening edge plus: **See Exterior Elevations and Roof Plans**

1. Awning (when installed) must project 4 feet in depth
2. Roof overhang (as applicable) must be at least 4 feet in depth
3. Option: door can be recessed 4 feet
4. Other means provides equivalent protection (Integrated Flashing Assembly)

☑E7 All building floor areas (in square feet) of both conditioned and unconditioned space are indicated on the Certificate of Compliance. The commissioner and builder shall verify that the figures match what are specified on the floor plans.

☑E8 All applicable Certificate(s) of Compliance and performance PERF-1 Form(s) are inserted on the drawings (**see drawing index on cover sheet**). Enforcement of the California Energy Commission Standards necessitates that the Certificate(s) of Compliance and PERF-1 Form(s) be accessible and available in the field. The Field Inspection Energy Checklist portions of each Certificate of Compliance is completed and submitted with the Energy Documentation (Energy Checklist will be used by the Field Inspector during each applicable stage of inspection to verify compliance with the Standards).

☑E9 All **insulation** shall be certified by Department of Consumer Affairs, Bureau of Home Furnishings and Thermal Insulation for compliance with California Code of Regulations, Title 24, Part 12, Chapters 12-13, Article 3.

☑E10 A **radiant barrier** requires an emittance of 0.05 or less, tested in accordance with ASTM C 1371 or ASTM E 408, and shall be certified by the department of Consumer Affairs.

☑E11 All The insulation values for walls, ceilings, and floors are specified under the Opaque Surface Details where the assembly frame type, cavity insulation values, continuous insulation values, etc. are demonstrated for each assembly type. Cavity and continuous insulation values identified on the state compliant forms match the insulation values specified in the plan details and Cross Sections or Architecture Details of the Structure/Architecture plans.

☑E12 Joints, penetrations and openings in the building envelope between conditioned and unconditioned spaces shall be **sealed to limit infiltration and exfiltration**. The maximum air leakage rate is typically established at 0.04 cfm/sf and is consistent with air leakage requirements in the IECC. Exterior doors shall have air infiltration rates not exceeding 0.3 cfm/sf. Double doors (swinging) requires maximum of 1.0 cfm/sf. When tested according to NFRC-400 or ASTM E283 at a pressure differential of 75 pascals (or 1.57 pounds per sf).

☑E13 Concrete slab foundation requires a capillary break. Use a minimum of 4 inch thick base of ⅜ inch or larger clean aggregate with a vapor retarder in direct contact with concrete. The concrete mix design must address bleeding, shrinkage, and curing. Refer to structural drawings and geological soils investigation report for an alternative equivalent design per CEC 4.505.2.1 (3).

☑E14 Building materials with visible signs of water damage shall not be used. Wood products may not exceed 19 percent moisture content. Field verification will be verified per CEC 4.505.3.

☑E15 CGBC-5.507.4.3 requires interior sound transmission of wall and floor – ceiling assemblies separating tenant spaces and tenant spaces and public places. The project site is **not** located inside a **high-impact** region. Thus, the STC shall be at least 40 and is referenced on assembly plan details on sheets **G3.0 and G3.1.**

MECHANICAL:

☑F1 CGBC - requires the MECH-2C Form on the plans to identify the Mechanical mandatory measures, or to use whatever additional information format that is most appropriate for specifying the mandatory measures in the plan set (**refer to mechanical plans and details**).

☑F2 HVAC and any refrigeration equipment must not contain **CFCs**. Fire suppression equipment may not contain **Halons**.

☑F3 **Thermostats must have a clock mechanism** allowing occupant to program the temperature set-points for at least four periods within 24 hours. Controls may allow supplementary heater operation during transient periods such as start-ups and following room thermostat set-point advance, if the controls provide preferential rate control.

☑F4 **Air conditioning equipment** (manufactured after 1/1/2015) must meet the applicable minimum efficiency values as determined by Title 20 California Code of Regulations Section 1605.1. State Standards are the same as Federal regulations pursuant to NAECA or EPAct which prevents the sale of unapproved or unlisted appliances. Verify manufacturing standards and mandated manufacturing dates for state compliance. Table 110.2-B (2013 CEC) specifies efficiency requirements.

☑F5 **CGBC Acceptance Tests** are mandatory measures that require the installing contractor to field verify and/or test specific HVAC equipment and controls to ensure that the newly installed equipment and controls function properly after installation. The only Acceptance Test conducted by a HERS Rater is the Air Distribution Test (MECH-4A). Refer to Chapter 10 of the 2013 Nonresidential Compliance Manual for full information on the Mechanical Acceptance Test requirements, which equipment and controls require field verification and/or testing, and the procedures on how to conduct the Acceptance Tests. The General Contractor is responsible to verify all applicable Acceptance Tests on the MECH-1C. The project commissioner and city Inspector will reference the Acceptance Tests identified on the MECH-1C to verify which Acceptance Forms to collect before conducting a Final Inspection and issuing the Occupancy Permit.

☑F6 All CGBC ventilation requirements are mandatory measures, some of which require Acceptance Testing. All enclosed spaces that are normally used by humans (spaces where people can be reasonably expected to remain for an extended period of time) must be continuously ventilated during occupied hours with outdoor air using either natural or mechanical ventilation. See **Mechanical Plans, Schedules, and Details**. The HVAC contractor shall verify that the Adjusted Fan Power Index (Row 7 of MECH-3C) does not exceed 0.8 W/CFM for constant volume systems or 1.25 W/CFM for VAV systems.

☑F7 Mechanical ventilation system is identified on Page 1 of the MECH-2C. The HVAC contractor shall verify that the ventilation and **minimum ventilation rates** (cfm) for each HVAC system identified on the form matches the mechanical schedule on the building plans. A MECH-3C form is included showing that the minimum ventilation requirements have been met. All applicable mandatory measures for ventilation rates (cfm) are specified on the MECH-2C. . The Standards require that a space conditioning system provide outdoor air equal to or greater than the ventilation rates required for each of the spaces that it serves. For every space, the required ventilated air can be provided either directly through supply air, or indirectly through transfer of air from the plenum or an adjacent space, which is calculated on the MECH-3C. Air may be transferred using any method that ensures a positive airflow. Examples include dedicated transfer fans, exhaust fans and fan-powered VAV boxes. A system having a ducted return may be balanced so that air naturally transfers into the space. Exhaust fans serving the space may discharge directly outdoors, or into a return plenum. Transfer systems should be designed to minimize recirculation of transfer air back into the space; duct work should be arranged to separate the transfer air intake and return points. Note: For each space requiring mechanical ventilation the ventilation rates must be no less than the larger of:

1. The conditioned floor area of the space multiplied by the applicable minimum ventilation rate;
2. or 15 cfm per person multiplied by the expected number of occupants. For spaces with fixed seating (such as a theater or auditorium) the expected number of occupants is the number of fixed seats. For spaces without fixed seating, the expected number of occupants is assumed to be no less than one-half of the maximum occupant load assumed for egress purposes in the Nonresidential Compliance Manual.
3. 0.20 CFM per square feet of conditioned floor area is required for retails stores.

☑F8 The brake horsepower is specified by the Mechanical Designer in the mechanical equipment schedule. A **mechanical equipment cut sheet** from the manufacturer is included in the Project Manual for all fan systems greater than 25 hp. Mechanical equipment cut sheets are also provided for economizers, DCV systems, DDC, and all other equipment that the Project commissioner requested to complete the commissioning process.

☑F9 The **HVAC equipment efficiencies** and applicable prescriptive measures are specified on Page 1 or 2 of the MECH-2C. On the MECH-2C, the Documentation Author identifies the type of HVAC system, the number of systems, and the HVAC efficiencies and capacities and the page reference on the plans where the specifications for each item that pertains to that particular HVAC system is found. The General Contractor and the commissioner must verify that the efficiencies and capacities of the HVAC equipment identified on the form matches the mechanical schedule on the building plans and ensure that all applicable mandatory measures for the HVAC equipment are specified on the MECH-2C and referenced on the mandatory measures note block.

☑F10 Manufacturers of equipment regulated by the Appliance Efficiency Regulations are required to certify their equipment to the Energy Commission. HVAC contractor shall verify current **certification of HVAC equipment** using one of the following options:

1. Current Energy Commission's Appliances Database which includes listings of certified HVAC equipment
2. at: http://www.energy.ca.gov/appliances/database/index.html;
3. or call the Energy Standards Hotline at: 1-800-772-3300 or (916) 654-5106.

☑F11 The HVAC systems must prescriptively comply with new refrigerant charge, proper airflow, and fan watt draw verification inspections performed by certified HERS raters. Duct testing is also a HERS verification inspection and a mandatory requirement. The General Contractor understands that a third-party, independent verification is mandatory for:

1. Airtight air handler boxes
2. High efficient furnace fans
3. Refrigerant charge indicator displays (CID)
4. Checking and certification correctly sizing the HVAC system(s)

☑F12 HVAC **thermostat and controls** must comply with the applicable mandatory controls that pertain to the system and are specified on Page 1 of the MECH-2C form. The HVAC Contractor is required to verify that the thermostat and controls for each HVAC system identified on the form match the mechanical schedule on the mechanical Drawing Sheets of the building plans. The applicable mandatory measures (listed below) for the HVAC thermostats and controls are specified on the MECH-2C (incorporated on the plans as the Mechanical mandatory measures note block).

☑F13 HVAC **Controls for heat pumps** with supplementary electric resistance heaters must meet the following mandatory requirements:

1. Prevent supplementary heater operation when the heating load can be met by the heat pump alone.
2. The cut-on/off temperature for compression heating must be higher than the cut-on/off temperature for supplementary heating.
1. Thermostats controlling unitary heating and/or cooling systems (including heat pumps) not connected to a central energy management control system must be a setback thermostat.

☑F14 The minimum rate of outdoor air or the rate required for make-up of exhaust systems that are required for a process for control of odors or for the removal of contaminants within a space, shall be supplied at all times to each space when occupied. The Air handling Unit equipped with an outdoor air economizer, meets ASHRAE Standard 62.1 which exceeds the state mandatory standards.

☑F15 Air flow at the return must be verified by an independent HERS rater to meet the minimum requirement of 350 cfm per ton of A/C capacity.

☑F16 The least of three air changes per hour or the minimum rate of outdoor air must be supplied to the whole building one hour prior to normal building occupancy. Each HVAC system must have controls capable of the following:

1. Automatic shut off during periods of nonuse and shall have an automatic time switch that has an accessible 4 hour manual override; or an occupancy sensor; or a manually operated 4 hour timer.
2. Automatic restart and temporary operation as required to maintain: a setback heating thermostat set-point if the system provides mechanical heating; and a setup cooling thermostat set-point if the system provides mechanical cooling.

☑F17 The Standards require an Outdoor Damper Control. The installed damper for outdoor air supply and exhaust equipment must automatically close upon fan shutdown.

☑F18 Split-systems and heat pumps and variable refrigerant flow (VRF) where the VRF capacity is defined by that of the condensing unit requires temperature sensors permanently installed to monitor system operation for:

1. Outside air, supply air and return air
2. Accuracy of plus or minus 2 degrees F over the range of 40 degrees F to 80 degrees F.
3. Optional refrigerant pressure sensors with a 3 percent accuracy.
4. Controller shall have the capability of value display of each sensor.
5. Controller shall provide system status by indicating free cooling, enabled economizer, enabled compressor, enabled heating, and mixed-air low limit active cycle.
1. Unit controller shall manually initiate each operation mode so the compressors, economizers, fans and heating system can be independently tested and verified.
2. Faults shall be reported to a fault management application accessible by day-to-day operating or service personnel, or annunciated locally on zone thermostats.
3. FDD system (certified by the Energy Commission) that will detect air temperature sensor failure, not economizing when it should, economize when it should not, damper not modulating, and excess outdoor air.

☑F19 The VAV Minimum Position Control & Demand Control Ventilation (DCV) systems reduce the amount of ventilation supply air in response to a measured level of carbon dioxide (CO_2) in the occupied zone. The Standards only permit CO_2 sensors for the purpose of meeting this requirement; VOC and so-called "IAQ" sensors are not approved as alternative devices to meet this requirement.

☑F20 The HVAC system uses a duct system to transfer conditioned air to a given space. Thus, the ducts must be insulated. The duct insulation values are identified and referenced on Page 1 of the MECH-2C. The HVAC contractor is required to verify that the duct insulation values for each HVAC system identified on the form matches the mechanical schedule on the building plans. The HVAC contractor must also ensure that all applicable mandatory measures for HVAC duct systems are specified on the MECH-2C (incorporated on the plans as the Mechanical mandatory measures note block). All air distribution system ducts and plenums, including building cavities, mechanical closets, air handler boxes and support platforms used as ducts or plenums, are required to be installed and sealed in accordance with the California Mechanical Code (CMC) and Standards. Also, portions of the supply and return ducts located in any of the following places shall be insulated to a minimum level of R-8:

1. Outdoors; or
2. In a space between the roof and an insulated ceiling; or
3. In a space directly under a roof with fixed vents or openings to the outside or unconditioned spaces.

☑F21 Toilets require exhaust fans; Energy Star compliant and ducted to outside the building.

☑F22 Cover all duct openings and the newly installed mechanical equipment during construction as well as during storage on the construction site. Related air distribution components and openings must be adequately covered, taped and sealed using sheet-metal, plastic, or other methods to reduce the amount of dust, water, and debris which may accumulate.

PLUMBING:

☑G1 **Water conserving fixtures** and fittings are required. All fixtures and fittings must be installed in accordance with the California Plumbing Code, and shall meet the applicable standards referenced in Table 1401.1 and chapter 6 of the CAL Green Code. Comply with the following:

Water Closet:	1.28 gallons per flush max.
Urinals:	0.50 gallons per flush max.
Lavatory:	0.50 gallons per minute at 60 psi
Food prep sink:	2.2 gallons per minute at 60 psi

Note: An alternative to state certified fixtures requires Water Reduction worksheets and calculations which are available to fill out by the plumbing contractor in the project manual to demonstrate 20 percent overall water use reduction.

☑G2 A water budget must be developed for landscaping. Separate meters are necessary for indoor and outdoor potable water use for landscaped areas of at least 1,000 square feet but not more than 5,000 sq. ft. Separate sub-meters are to be installed for outdoor potable water use. Prescriptive measures are found at http://www.water.ca.gov/wateruseefficiency/docs/WaterOrdSec492.cfm. See sections 492.5 through 492.8, 492.10 and 492.11.

☑G3 The **automatic irrigation system controllers** shall comply as follows:

1. Controllers shall be weather- or soil moisture-based controllers that automatically adjust irrigation in response to changes in plants' needs as weather conditions change.
2. Weather-based controllers without integral rain sensors or communication systems that account for local rainfall shall have a separate wired or wireless rain sensors which connects or communicates with the controller(s). Soil moisture-based controllers are not required to have rain sensor input.
3. Irrigation system must not spray on building walls.

☑G4 The Piping for all space-conditioning and service water heating systems shall be insulated. The **pipe insulation** values are identified or referenced on Page 1 of the MECH-2C for space conditioning systems, and on Page 3 of the MECH-2C for service water-heating systems. The HVAC contractor shall be responsible to verify that the pipe insulation values for each HVAC system (Page 1 of MECH-2C) and/or each water heating system (Page 3 of MECH-2C) identified on the form matches the mechanical/water-heating schedule on the building plans and ensure that all applicable mandatory measures (listed below) for pipe insulation are specified on the MECH-2C and referenced on the mandatory measures. NOTE: The MECH-2C is incorporated on the plans as the Mechanical mandatory measures note block. Pipe insulation thickness depends on the temperature of the fluid passing through the pipe, the pipe diameter, the function of the pipe within the system, and the pipe insulation's thermal

☑G5 The conductivity ranges are typical for fiberglass or **foam pipe insulation**. Runouts are defined as being less than two inches in diameter, less than 12 feet long, and connected to fixtures or individual terminal units. Piping within fan coil units and within other heating or cooling equipment may be considered runouts for the purposes of determining the required pipe insulation. Piping that does not require insulation includes the following:

1. Factory installed piping within listed space-conditioning equipment. Nationally recognized certification programs that are accepted by the Energy Commission for certifying efficiencies of appliances and equipment are considered to meet the requirements for this exception.
2. Piping that conveys fluid with a design operating temperature range between 60°F and 105°F, such as cooling tower piping or piping in water loop heat pump systems.
3. Piping that serves process loads, gas piping, cold domestic water piping, condensate drains, roof drains, vents or waste piping.
4. Piping that penetrates framing members shall not be required to have pipe insulation for the distance of the framing penetration. Metal piping that penetrates metal framing shall use grommets, plugs, wrapping or other insulating materials to assure that no contact is made with the metal framing.
5. Insulation exposed to weather shall be suitable for outdoor service (e.g. protected by aluminum, sheet metal, painted canvas, or plastic cover). Cellular foam insulation shall be protected as above or painted with a coating that is water retardant and provides shielding from solar radiation that can cause degradation of the material.
6. Insulation covering chilled water piping and refrigerant suction piping located outside the conditioned space shall include a vapor retardant located outside the insulation (unless the insulation is inherently vapor retardant), all penetrations and joints of which shall be sealed.

☑G6 All service hot water equipment shall be certified and meet the efficiency and installation requirements. On Page 3 of the MECH-2C. The type of water heating system, the number of systems, and the water heater efficiency is identified on the **Plumbing Plans**. The Plumbing contractor shall verify that the water heater efficiencies and installation criteria identified on the form matches the mechanical/water-heating schedule and also ensure that all applicable mandatory measures (listed below) for water heating equipment are specified on the MECH-2C and referenced on the mandatory measures note block. The MECH-2C is incorporated on the plans as the Mechanical mandatory measures note block.

☑G7 Manufacturers of service water heating systems and equipment must certify that the system or equipment is equipped with **automatic temperature controls** that allow the temperature to be adjusted from the lowest to the highest allowed temperature settings for the intended use as listed in Table 2, Chapter 49 of the ASHRAE Handbook, HVAC Applications Volume.

Narkweather ARCHITECTS INC.
73 330 HWY 111, SUITE A / PALM DESERT, CA 92260-4016
PHONE: (760) 346-4090 / E-MAIL: info@narkweather.net

OWNERSHIP OF DOCUMENTS
DRAWINGS AND SPECIFICATIONS AS INSTRUMENTS OF SERVICE ARE AND SHALL REMAIN THE PROPERTY OF THE DESIGNER WHETHER THE PROJECT FOR WHICH THEY WERE PREPARED IS EXECUTED OR NOT. THEY ARE NOT TO BE USED ON OTHER PROJECTS OR EXTENSIONS TO THIS PROJECT EXCEPT BY AGREEMENT IN WRITING AND WITH APPROPRIATE COMPENSATION TO Narkweather Architects Inc.
COPYRIGHT 2016 Narkweather Architects

CITY OF RANCHO MIRAGE
OBSERVATORY
Rancho Mirage Public Library
PROJECT DESCRIPTION
SITE ADDRESS 71-100 California 111, Rancho Mirage, CA 92270

SHEET CONTENT
Cal Green REQUIREMENTS

DRAWING SCALE:
SCALE: (NONE)

ISSUE DATE		
MONTH	DAY	YEAR
SEPT.	29	2016

1	REVISION DATE:
	REVISION DATE:
	REVISION DATE:
	REVISION DATE:
	REVISION DATE:

RECOMMENDED FOR APPROVAL BY: (FOR CITY ENGINEER USAGE)
LELAND E. COLE 9/27/16 DATE
R.C.E. 47159 EXP. 12/31/17
APPROVED BY CITY OF RANCHO MIRAGE: DATE
WILLIAM A. DIOS, CITY ENGINEER
R.C.E. 43915, EXP. 2/30/2017

DRAWING NUMBER
G5
SHEET # 9 OF 56
PRIVATE REFERENCE #
CITY REFERENCE #

Bid Set - 10/07/2016

☑G8 All water heating systems and equipment must meet the applicable minimum **efficiency requirements** of the Appliance Efficiency Regulations.

☑G9 All Lavatories in public restrooms must have controls that limit the water supply temperature to **110°F**. When the service water heater supplies only restrooms, the water heater thermostat may be set to no greater than 110°F to satisfy this requirement; otherwise controls such as automatic mixing valves must be installed.

INDOOR LIGHTING:

☑H1 Applicable **Energy Forms** (LTG-2C, LTG-3C, etc.) are printed on the plans (electronically incorporated) along with the Certificate of Compliance to help the Inspector identify the energy components that must be verified in the field. The Electrical Contractor shall verify that all applicable forms are submitted along with the Electrical/Lighting shop drawings.

☑H2 The field inspector will check compliant peel-down and standard factory installed **luminaire labels**. The certification process will check and verify compliance with the standards and electrical drawings. The maximum re-lamping rated wattage must be listed per UL 1574, 1598, 2108, or 8750 (factory installed rated wattage label, in this case, must not be a peel-off type).

☑H3 **Acceptance Tests** are mandatory measures that require the installing contractor to field verify and/or test specific indoor lighting controls to ensure that the newly installed lighting controls function properly after installation. Comply with the 2013 Nonresidential Compliance Manual providing detailed information on the Indoor Lighting Acceptance Test requirements, which explains and identifies controls requiring field verification and/or testing, and the procedures on how to conduct the Acceptance Tests. The Electrical Contractor must verify that all applicable Acceptance Tests and controls that require field verification and/or testing are identified on the LTG-1C. The Electrical Contractor may be required by the city inspector to resubmit the LTG-1C identifying all Acceptance Tests if all applicable Acceptance Tests are not specified on the LTG-1C. The Electrical Contractor must verify all applicable Acceptance Tests on the LTG-1C because the commissioner and city Inspector will reference the Acceptance Tests identified on the LTG-1C to verify which Acceptance Forms to collect before conducting a Final Inspection and issuing the Occupancy Permit for the building.

1. All parties shall verify that ALL pages have the same run number and date as the PERF-1 Form.

The applicant models the entire building under the same computer run (Mechanical, Lighting, and Envelope Compliance). All of the energy compliance forms (ENV, LTG,

1. and MECH) have the same run number and date as the PERF-1 Form (all parties to confirm).
2. Note: All parties to verify; under the Performance Approach, the Documentation Author cannot model the Indoor Lighting Compliance alone (Lighting only), or use the Tailored Method to determine the allowed LPDs (watts per square foot). The Prescriptive Approach shall be used in these situations.

☑H4 Areas of buildings that are not occupied 24/7 cannot leave the lights on. Modest allowances for egress lighting apply, but, just like general lighting, egress lighting will have to be **shut off outside occupied times**. Only offices will be allowed to maintain lighting 24/7, but only along designated paths of egress, and at a reduced maximum of just 0.05 W per square foot. All lighting **control devices** are subject to mandatory measures.

1. Individual devices: self-contained manufactured state certified per California Title 20 Appliance Efficiency Regulations.
2. Two or more components for fully functional lighting control systems.
3. Indicator lights, as applicable, must not consume more than one watt of power per indicator light.
4. **TIME** and switch controls must comply as follows…
   a. Automatic types must be certified per California Title 20 Appliance Efficiency
   b. Astronomical types must be certified per California Title 20 Appliance Efficiency
   c. Multilevel types must also include at least two separately programmable steps per zone.
   d. Outdoor types shall also have setback functions allowing lighting on each controlled channel to be switched or dimmed to lower levels. The setback functions shall be capable of being programmed by the user for at least one specific time of day.
5. State Title 20 Appliance Efficiency Regulations require mandatory certification for:
   a. Automatic daylight controls
   b. Photo Controls
   c. Dimmers
   d. Occupant sensing controls (motion and occupant detection types)
   e. Vacancy sensor types
   f. Partial ON sensors
   g. Partial OFF sensors
6. Part-night outdoor lighting controls must comply as follows.
   a. Have sunrise and sunset predication accuracy within 15 minutes and timekeeping accuracy within five minutes per year.
   b. Have the ability to setback or turn off lighting at night by means of a programmable timeclock or motion sensing device.
   c. When controlled with a timeclock, program to allow the setback or turning off to occur from any time at night until anytime in the morning.
7. In addition to mandatory installed lighting controls, all indoor lighting shall also include:
   a. Occupant sensing control, automatic time-switch, signal from another building system, or other means of automatically shutting OFF all lights typically not occupied. Note: Countdown timer switches shall not be used.

1. Other than occupancy sensor, automatic time-switches shall incorporate an override control that allows lights to remain ON for a maximum of 2 hours except in single tenant retail.
2. Incorporate an automatic holiday "shut-OFF" feature that turns OFF all loads for at least 24 hours, and then resumes the normally scheduled operation.
3. Offices and conference rooms require occupant sensor controls to automatically shut OFF all lights when room is not occupied, in addition to manual over-ride.

a. Also provide controls for a space enclosed by ceiling height partitions less than 5,000 square feet, except single tenant retail.
b. In addition, provide separate controls for general display, ornamental and display cases.

☑H5 There are several lighting applications that are **exempt** from the indoor luminaire power density (watts per square foot) requirements:

1. Lighting installed by the manufacturer in refrigerated cases, walk-in freezers, vending machines, food preparation equipment, and scientific and industrial equipment.
2. Lighting that is required for exit signs subject to the CBC. Exit signs shall meet the requirements of the Appliance Efficiency Regulations.
3. Exit-way or egress illumination that is normally off and that is subject to the CBC.
4. Temporary lighting systems.
5. Lighting for signs.

☑H6 The mandatory measures require independent switching or control devices for each area enclosed by ceiling-height partitions specified under the Mandatory Lighting Controls on Page 3 of the LTG-1C. Independent switching for an enclosed area is not identified on the forms, but specified on the **Electrical Plans**. On the LTG-1C, where a control device is used, the Documentation data identifies the type of area control (i.e. an occupant sensor), the number of units, and the location in the building of the device are used to control the lights. The commissioner will verify that each area enclosed by ceiling-height partitions is controlled by manual switching on the Electrical Plans, or that the area control devices identified on the form are specified in the lighting schedule on the Electrical/Lighting plans.

☑H7 In addition to lighting controls, all indoor lighting shall be equipped with **special control devices** that meet the following requirements:

1. Provide an occupant sensing control, automatic time-switch control, signal from another building system, or other control capable of automatically shutting off all of the lighting when the space is typically unoccupied.

1. Separate controls for a space enclosed by ceiling height partitions not exceeding 5,000 square feet.
2. Separate controls for general, display, ornamental and display case lighting.
3. Countdown timer switches shall not be used to comply with the automatic shut-off requirements.

☑H8 Each area enclosed by ceiling-height partitions (a partition that rises from the floor to the ceiling) is controlled by **independent switching or a control device**. This switching or control device shall be:

1. Readily accessible; and
2. Located so that a person using the device can see the lights or area controlled by that switch, or so that the area being lit is annunciated; and
3. Manually operated, or automatically controlled by an occupant sensor that meets the applicable requirements.

☑H9 **Other devices** may be installed in conjunction with the switching or control device provided that they:

1. Permit the switching or control device to manually turn the lights off in each area enclosed by ceiling-height partitions; and
2. Reset the mode of any automatic system to normal operation without further action.

☑H10 **Multilevel lighting controls** have uniformity requirements per CEC Table 130.1-A. The project complies as follows:

1. LED luminaires and LED source systems: continuous dimming 10-100 percent
2. Linear fluorescent and U-bent > 13 watts:
   a. Control steps: use minimum one step in 4 ranges; 20-40%, 50-70%, 80-85%, and 100%
   b. For uniform level of illuminance; stepped dimming, continuous dimming, switching alternate lamps in each luminaire, having a minimum of four lamps per luminaire, or illuminating the same area and in the same manner.

- If the device is placed in calibration mode, it shall automatically restore its time delay settings to normal operation programmed time delays after no more than 60 minutes; and
- Have a set-point control that easily distinguishes settings to within 10% of full scale adjustment; and
- Have a light sensor that has a linear response with 5% accuracy over the range of illuminance measured by the light sensor; and
- Have a light sensor that is physically separated from where calibration adjustments are made, or is capable of being calibrated in a manner that the person initiating calibration is remote from the sensor during calibration to NOT influence calibration accuracy.

☑H11 The Interior **photosensor** shall not have a mechanical slide cover or other device that permits easy unauthorized disabling of the control, and shall not be incorporated into a wall-mounted occupant sensor.

☑H12 Automatic control devices shall incorporate an automatic holiday "shut-off" feature that turns off all loads for at least 24 hours, and then resumes the normally scheduled operation.

☑H13 When an **automatic control device** is installed, it shall incorporate an override switching device that are:

- readily accessible; and
- located so that a person using the device can see the lights or the area controlled by that switch, or so that the area being lit is annunciated; and
- manually operated; and
- Allows the lighting to remain on for no more than 2 hours when an override is initiated; and where captive-key override is utilized, override time may exceed 2 hours in T.I. space.
- Controls an area enclosed by ceiling height partitions not exceeding 5,000 ft^2.
  Exception: In single tenant retail spaces, the area controlled may not exceed 20,000 ft^2.

☑H14 For offices that are 250 ft^2 or smaller, multipurpose rooms less than 1,000 ft^2, and classrooms or conference rooms of any size shall be equipped with occupant sensor(s) to shut off the lighting. In addition, controls shall be provided that allow the lights to be manually shut off regardless of the sensor status. The following lighting applications are **exempt** from the shut-off controls requirements for indoor lighting:

- Where the lighting system is serving an area that must be continuously lit 24 hours per day/365 days per year.
- Lighting in corridors, guestrooms, dwelling units of high-rise residential buildings and hotel/motels, and parking garages.
- Up to 0.3 watts per square foot of lighting in any area within a building that must be continuously illuminated for reasons of building security or emergency egress, provided that the area is designated a security or emergency egress area on the plans and specifications submitted to the enforcement agency.

OUTDOOR LIGHTING:

☑J1 The Electrical Contractor must verify that all applicable Energy Forms (OLTG-1C and OLTG-2C) are electronically incorporated on the drawings (contract documents). Having all of the energy forms simplifies the verification process, and helps the field Inspector understand the energy components. The Electrical contractor must acknowledge that all applicable forms have been reviewed along with the Electrical/Lighting plans to assure state compliance.

☑J2 **Acceptance Tests** are mandatory measures that require the installing contractor to field verify and/or test specific outdoor lighting controls to ensure that the newly installed lighting controls function properly after installation. Chapter 10 of the 2013 Nonresidential Compliance Manual provides detailed information on the Outdoor Lighting Acceptance Test requirements, which controls require field verification and/or testing, and the procedures on how to conduct the Acceptance Tests. The commissioner and field Inspector will reference the Acceptance Tests identified on the OLTG-1C to verify which Acceptance Forms to collect before conducting a Final Inspection and issuing the Occupancy Permit for the building. **NOTE:** *Lighting Controls* also applies to outdoor motion sensors and outdoor shut-off controls (astronomical time switch and photocontrol)

☑J3 CGBC - 5.106.8 **Light pollution reduction** (outdoors): Except Emergency Lighting and Luminaires per 140.7. Lighting Zone for the Project is designated **LZ3** (medium Ambient Illumination). Note: For the first time, lighting in parking lots, and loading and unloading areas are now required to have occupancy controls, with at least one step between 20 and 50 percent of full lighting power. Also, the 2008 CEC required all outdoor lighting to have either a photocontrol system or an automatic scheduling control system; the new 2013 CEC requires both. Motion sensor controls are required, in addition to photocontrols and scheduling controls, for all outdoor lighting mounted 24 feet above the ground or lower and for any incandescent luminaires over 100 watts. Controls must reduce lighting power to each luminaire by at least 40 percent when the lights are not in use.

Changing the light pollution/trespass language, the 2013 CEC has eliminated the old cutoff system used for classifying outdoor luminaires up to 175W. Instead, luminaires up to 150W will have to comply with the IESNA's BUG system for assessing backlight, uplight and glare. The code language is up to date by adopting the BUG rating system to minimize light trespass, light pollution and glare hazards.

a. CEC Lighting Zones 1-4
b. BUG (Backlight – Uplight – Glare) per IES TM-15-11
c. BUG max: Table 5.106.8

1. Backlight:	No Limits if luminaire is 2 mounting heights away from P.L.	
2. Backlight:	Between 1 and 2 mounting heights away from P.L.	= B4 rating
3. Backlight:	Between 0.5 and 1 mounting heights away from P.L.	= B3 rating
4. Backlight:	less than 0.5 mounting heights away from P.L.	= B1 rating
5. Uplight:	Area lighting (parking)	= U.0 rating
6. Uplight:	All other areas including decorative types	= U.3 rating
7. Glare:	Luminaire greater than 2 MH from P.L.	= G.3 rating
8. Glare:	Luminaire front hemisphere is 1 – 2 MH from P.L.	= G.1 rating
9. Glare:	Luminaire front hemisphere is 0.5-1 MH from P.L.	= G.1 rating
10. Glare:	Luminaire back hemisphere is < than 0.5 MH from P.L.	= G.0 rating

☑J4 General outdoor lighting shall be controlled by **occupant sensing controls** having at least one control step between 20 percent and 50 percent of the design lighting power. No more than 500 watts of rated lighting power shall be controlled together as a single zone. A reasonable uniform

The controls shall be capable of automatically turning the lighting fully ON only in the separately controlled space, and shall be automatically activated from all designated paths of egress.

☑J5 All permanently installed outdoor lighting shall have shut-off controls meeting the requirements of §132(c). Under Mandatory Controls on Page 2 of the OLTG-1C, the Document identifies a photo-control or astronomical time switch as the shut-off control(s) for the outdoor lighting. The Electrical Contractor must verify that the shut-off controls identified on the form match the shut-off controls specified on the **Electrical Plans** or in the lighting schedule of the Electrical/Lighting plans.

☑J6 All permanently installed outdoor lighting is controlled by a **photo-control** or astronomical time switch that automatically turns off the outdoor lighting when daylight is available. Automatic time switch control devices used to control outdoor lighting are required to be capable of programming different schedules for weekdays and weekends and also have a program backup capabilities that prevent the loss of the device's schedules for at least 7 days, and the device's time and date setting for at least 72 hours if power is interrupted.

☑J7 The outdoor lighting applications shall have automatic multi- level lighting controls. Under Mandatory Controls on Page 2 of the OLTG-1C, the documentation identifies an automatic time switch control that reduces lighting power. The Electrical Contractor must verify that the automatic time switch controls for reducing lighting power identified on the form are specified on the **Electrical Plans** or in the Lighting Schedule of the Electrical/Lighting plans. The proposed installed watts for outdoor lighting is also specified under the

☑J8 Once the Total Installed and Allowed Watts have been verified for compliance, the commissioner and field inspector shall verify that the lighting fixtures and the proposed installed watts identified in the Luminaire Schedule (Page 2 of the OLTG-1C) are specified on the **Electrical Plans** or in the Lighting Schedule of the Electrical/Lighting plans.

☑J9 Documentation identifies the rated wattage of each luminaire on Page 2 of the OLTG-1C. Every luminaire with lamps rated over 100 watts shall either have a lamp efficacy of at least 60 lumens per watt, or be controlled by a motion sensor. The Electrical Contractor and commissioner shall verify that all luminaires rated over 100 watts identified on the form are specified as having a minimum lamp efficacy of 60 lumens per watt or controlled by a motion sensor on the Electrical Plans or in the Lighting Schedule of the Electrical/Lighting plans.

☑J10 All outdoor luminaires with lamps rated over 100 watts must either have a lamp efficacy of at least 60 lumens per watt or be controlled by a motion sensor. Lamp efficacy, for the purposes of complying with this requirement, is the rated initial lamp lumens divided by the rated lamp power (watts), without including auxiliaries such as the ballast. This requirement will mostly impact fixtures that are designed for mercury vapor lamps and larger wattage incandescent lamps. Most linear fluorescent, metal halide, and high-pressure sodium lamps have a lamp efficacy greater than 60 lumens per watt and will easily comply. The following lighting applications are exempt from the lamp efficacy requirements for outdoor lighting:

1. Lighting required by health or life safety statute, ordinance, or regulation, included but not limited to, emergency lighting.
2. Light emitting diode, light emitting capacitors, neon and cold cathode lighting.
3. Sign lighting.

☑J11 All outdoor luminaires that use lamps rated greater than 175 watts in hardscape areas, including parking lots, building entrances, sales and non-sales canopies, and all outdoor sales areas shall be designated cutoff for light distribution. To comply with this requirement, the luminaire shall be rated cutoff in a photometric test report that includes any tilt or other non-level mounting conditions of the installed luminaire. Cutoff is a luminaire light distribution classification where the candela per 1,000 lamp lumens does not numerically exceed 25 (2.5%) at or above a vertical angle of 90 degrees above nadir, and 100 (10%) at or above a vertical angle of 80 degrees above nadir. Nadir is in the direction of straight down, as would be indicated by a plumb line. 90 degrees above nadir is horizontal. 80 degrees above nadir is 10 degrees below horizontal.

☑J12 The following lighting applications are exempt from the cutoff requirements for outdoor lighting:

1. Signs.
2. Lighting for building facades and vertical surfaces of walls.
3. Lighting required by a health or life safety statute, ordinance, or regulation, including but not limited to, emergency lighting.
4. Temporary outdoor lighting.

☑J13 The **Key circuiting issues are:**

1. Wiring for multi-level control: Lamps, luminaires or rows of luminaires are regularly assigned to different circuits so that light levels can be increased uniformly by switching
2. Lighting in the DAYLIT zone has to be on **separate circuits** from other lighting and, in most cases, must also be wired for multi-level control.
3. Lighting control devices are properly located, calibrated and set-points or schedules established.
4. Documentation is available to identify settings and programs for each device. Testing is to be performed on the following devices:

   Automatic daylighting
   Manual daylighting
   controls Occupancy
   sensing devices Automatic
   shut-off controls

5. Be aware of the potential for delays programmed into many control sequences. The purpose of delays is to prevent the system from controlling too rapidly and becoming unstable. With delays between 5 to 30 minutes, the acceptance testing can be prolonged considerably.

1. Each test instructs the contractor to return the systems to normal operating condition based on the initial schedules, set-points, and control parameters. These should be recorded prior to initiating the testing process.
2. Know exactly how the control sequences are programmed *before testing begins*. Otherwise, the contractor will not be able to customize the test to the particular systems or verify that the systems work as intended. Written control sequences often do not include enough detail to test the system against, or they are found to be incorrect. Testing based on incorrect sequences will not necessarily yield a valid result. In addition, to be successful, the contractor will need to know how to manipulate the control system.

ELECTRICAL ENERGY MANAGEMENT:

☑L1 The Electrical Contractor shall confirm and verify that each electrical service shall have metering that will allow the building Owner to get useful information for managing the use of electrical power. The requirements increase as the size of the service increases.

1. For smaller services, the building owner must be able to manually read the energy use (kWh) meter and to reset the readout to allow for period measurements, without of course affecting revenue measurements.
2. As service size increases, the meter must also allow for demand measurements so that the building owner or operator can gain a better understanding of how and when the building uses electrical power.
3. If the building is equipped with an Energy Management and Control System (EMCS) that provides these measurements, then the manual system is not required.

☑L2 Disaggregation of Electrical Circuits along with other measures are required above a minimum threshold that varies by load type. The Electrical Contractor shall confirm and verify all new power standards for electrical measures.

1. Electrical power systems must be designed and built such that the total load of specific building load types can be measured. For instance, lighting loads must be able to be measured independently of HVAC loads. The intent is to have a single feeder or breaker with each type of load (such as lighting) on it, such that a meter could be placed on the feeder to report energy use by that load type.
   a. Note that this is a wiring requirement only, and the providing of meters is optional.
   b. This section makes the National Electrical Code/California Electrical Code suggestion of voltage regulation mandatory, limiting branch circuit voltage drop to 3% at design load and to 2% in feeders at design load.
2. Mandatory requirements include, but not limited to these new power standards.

a. **EMCS** to meet and recognized for compliance with Part 6.
b. Requirements for demand responsive controls and equipment.
a. Maximum voltage drop requirements.
b. Disaggregation of electrical circuits (large service size).
c. Requirements for user accessible metering
d. For safety and security, there are number of specific requirements for the **service**, such as where they must be located, how many disconnecting devices may be used, and how they must be labeled, as described in Article 230 of the Code.

1. The CEC Standards also adds minimum requirements for switching of 120-volt receptacles in non-residential applications. The primary reason is to permit simple control of furniture mounted task lights and other plug loads. There are a number of exceptions and exemptions to this requirement as not all receptacles require control (verify).
2. Section 130.1(f) requires nonresidential buildings over 10,000 sf to have a demand responsive lighting system. The provisions of new Section 130.5 (e) require that demand responsive loads be equipped with controls that can receive at least one demand response signal and respond.
3. For buildings employing Energy Management Control Systems, some of the above requirements are modified provided that the EMCS provides them.
4. Projects are required to provide an electric meter that permits the building owner or manager to read the instantaneous power in kilowatts being used by the building, and to be able to reset and measure energy use in kilowatt-hours over a period of his own choosing. If this is possible from the utility company's revenue service meter, then an additional meter does not need to be provided.
5. For larger buildings and electrical systems (greater than 250 kVA, which is 700 amps at 120/208 volts three phase and over 1000 amps at 120/240 volts single phase), the meter must also record the historical peak demand in kilowatts.
6. For much larger systems (greater than 1000 kVA, which is over 2700 amps at 120/208 volts three phase and over 4000 amps at 120/240 volts single phase, the meter must also be able to report the kWh for a fixed rate period.

☑L3 The Electrical Contractor shall confirm and verify that both controlled and uncontrolled 120 volt receptacles must be provided in private offices, open office areas, reception lobby, conference rooms, kitchenettes, and copy rooms. The controlled receptacles shall comply as follows:

1. Electric circuits serving controlled receptacles shall be equipped with automatic shut-OFF controls following requirements prescribed in CEC 130.1(c) (1 through 5).
2. At least one controlled receptacle shall be installed within 6 feet from each uncontrolled receptacle or a split wired duplex receptacle shall be installed.
3. Controlled receptacles shall have a permanent marking to differentiate them from uncontrolled receptacles.

1. For open office areas, controlled circuits shall be provided and marked to support installation and configuration of office furniture with receptacles that comply with 130.5(d) 1,2 and 3.
2. Plug-in strips and other plug-in devices that incorporate and occupant sensor shall not be used to comply with this requirement.

☑L4 Service meters are required to be "Smart." Modern "smart" utility meters generally have all of the required features of this mandatory requirement, and more. The question is whether the building owner can access the information. The utility company owns the meter and there is no clear requirement for them to offer access to the data. If data access is provided, the mandatory requirement is met with the utility meter. The new type devices can be read by the building owner or occupant and must be provided. This applies to any electrical service and is invoked any time that any section of the Standard applies and a permit is obtained.

1. It must allow the building owner or occupant to view instantaneous power (kW) and have a manually resettable cumulative energy measurement (kWh) permitting periodic review of total electric energy use.
2. Larger services will require additional capabilities identified in 2013 CEC Table 130.5-A.
3. Verify that Modern electronic utility meters "smart meters" usually meet the requirements as long as the data is accessible to the building owner or occupant.
4. The cost of high performance meters is low and metering separate from the utility meter for energy monitoring, energy management, power quality measurement and other features not provided by the utility may be desirable.
   This section of the Standard requires buildings to be wired in a manner that separates loads by types onto independent feeders and risers through the building. This will require separate feeders and panels for lighting, plug and equipment loads, HVAC loads, etc. The requirements are contained in CEC Table 130.5-B.

Note that this requirement does not require any metering. By placing all load of a particular type on one feeder, a portable power measurement and analysis device can be temporarily attached to its feeder, measurements can be made, and then the device can be moved to another feeder.

☑L6 **(EMCS)** Energy Management Control Systems, 2013 CEC requirements are slightly modified provided that the **EMCS** satisfies the following provisions.

1. Projects are required to provide an electric meter that permits the building owner or manager to read the instantaneous power in kilowatts being used by the building, and to be able to reset and measure energy use in kilowatt-hours over a period of his own choosing. If this is possible from the utility company's revenue service meter, then an additional meter does not need to be provided.
2. For larger buildings and electrical systems (greater than 250 kVA, which is 700 amps at 120/208 volts three phase and over 1000 amps at 120/240 volts single phase), the meter must also record the historical peak demand in kilowatts.

1. For much larger systems (greater than 1000 kVA, which is over 2700 amps at 120/208 volts three phase and over 4000 amps at 120/240 volts single phase, the meter must also be able to report the kWh for a fixed rate period.

☑L7 The Electrical service panel requires a minimum busbar rating of 200 amps. Provide a reserved space in the service panel to allow for the future installation of a double pole circuit breaker for a future solar electric installation. Permanently mark; "For Future Solar Electric".

Narkweather ARCHITECTS INC.
73 330 HWY 111, SUITE A / PALM DESERT, CA 92260-4016
PHONE: (760) 346-4090 / E-MAIL: info@narkweather.net

OWNERSHIP OF DOCUMENTS
DRAWINGS AND SPECIFICATIONS AS INSTRUMENTS OF SERVICE ARE AND SHALL REMAIN THE PROPERTY OF THE DESIGNER WHETHER THE PROJECT FOR WHICH THEY WERE PREPARED IS EXECUTED OR NOT. THEY ARE NOT TO BE USED ON OTHER PROJECTS OR EXTENSIONS TO THIS PROJECT EXCEPT BY AGREEMENT IN WRITING AND WITH APPROPRIATE COMPENSATION TO Narkweather Architects Inc.
COPYRIGHT 2016 Narkweather Architects

CITY OF RANCHO MIRAGE
PROJECT DESCRIPTION: O B S E R V A T O R Y — Rancho Mirage Public Library
SITE ADDRESS: 71-100 California 111, Rancho Mirage, CA 92270

SHEET CONTENT
Cal Green REQUIREMENTS

DRAWING SCALE:
SCALE: (NONE)

ISSUE DATE		
MONTH	DAY	YEAR
SEPT.	29	2016

1 REVISION DATE:
REVISION DATE:
REVISION DATE:
REVISION DATE:
REVISION DATE:

(PLAN CHECK ENGINEER STAMP)
RECOMMENDED FOR APPROVAL BY:
LELAND E. COLE 9/27/16 DATE
R.C.E. 47159 EXP. 12/31/17
APPROVED BY CITY OF RANCHO MIRAGE:
WILLIAM A. ENOS, CITY ENGINEER DATE
R.C.E. 43910, EXP. 6/30/2017

DRAWING NUMBER
G6
SHEET # 10 OF 56
PRIVATE REFERENCE #
CITY REFERENCE #

Bid Set - 10/07/2016

CONSTRUCTION NOTES

1. PROPOSED CONCRETE ACCESS TO BE 3250 PSI CONCRETE 6" THICK ON 6"" CLASS II B COMPACTED TO CITY STANDARDS SECTIONS SHALL BE NO MORE THAN 10' LONG WITH EXPANSION JOINTS EVERY 10' AND TOOLED JOINTS EVERY 5'. SEE DETAIL THIS SHEET.
2. INSTALL ADA PATH OF TRAVEL & SIGNAGE
3. RELOCATE EXISTING MASONRY BENCHES TO THE OPPOSITE SIDE OF THE LIBRARY ENTRANCE
4. EXISTING CONCRETE PULLBOXES TO REMAIN–PROTECT IN PLACE–ADJUST TO GRADE OF SIDEWALK
5. EXISTING 32"X32" MASONRY COLUMN TO REMAIN–PROTECT IN PLACE
6. EXISTING ELECTRICAL STUB–UPS TO REMAIN–PROTECT IN PLACE– ADJUST TO GRADE AS NECESSARY
7. EXISTING ELECTRICAL VAULT TO REMAIN–PROTECT IN PLACE
8. PROPOSED HANDICAP ACCESS SIGNS
9. EXISTING 8" DIAMETER PEDESTAL LIGHTS TO REMAIN
10. EXISTING FIRE PATH TO BE ADJUSTED TO JOIN PROPOSED ACCESS
11. PROPOSED RAILING PER DETAIL 1/A3.2
12. INSTALL 3' DEEP TRUNCATED DOME SHEETS PER CITY STD DETAIL 502 COLOR---"RANCHO MIRAGE BROWN"
13. CONCRETE RETAINING WALL PER BUILDING & SAFETY HANDOUT

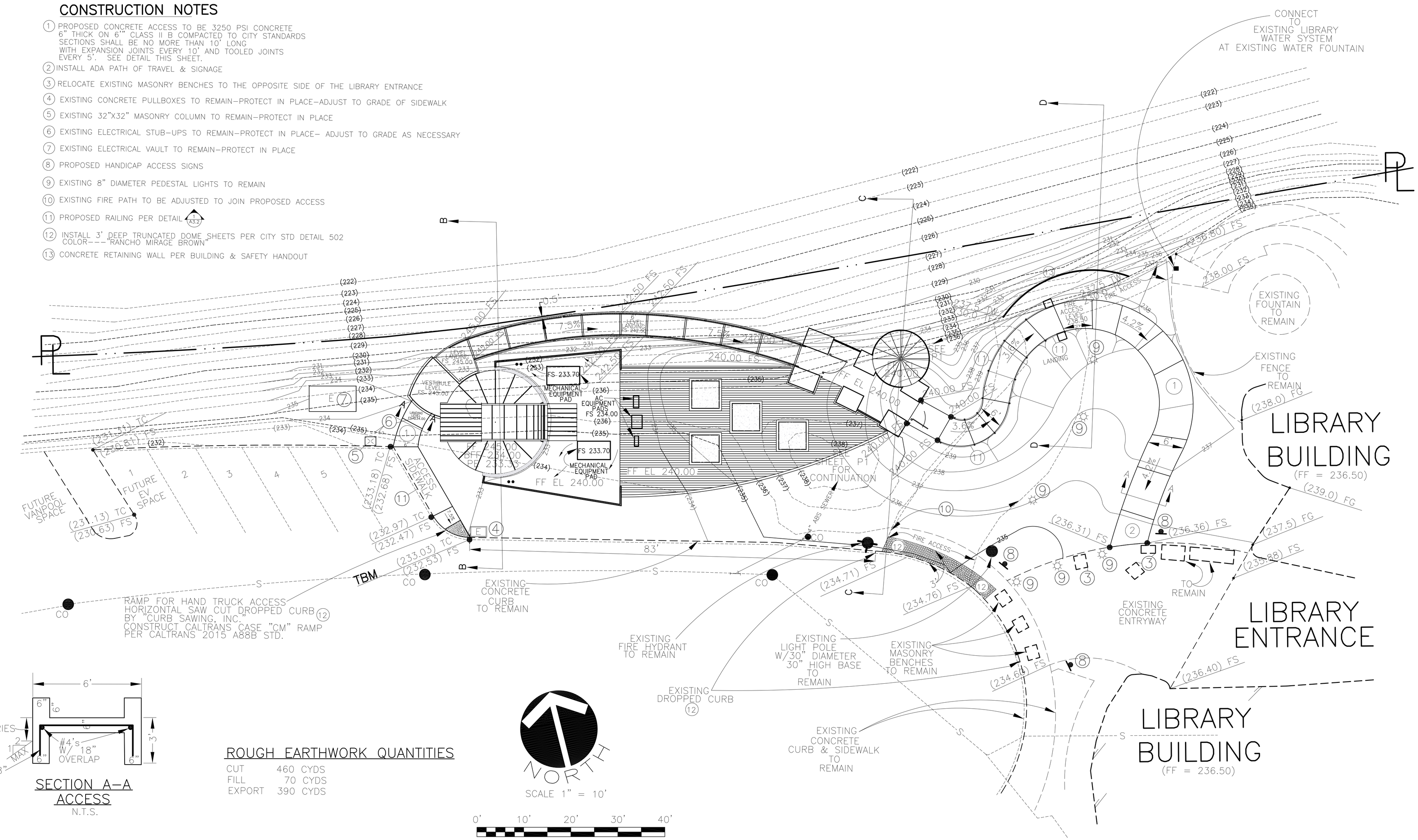

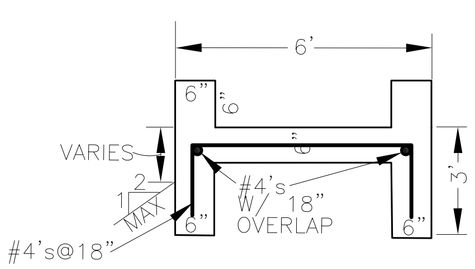

SECTION A–A
ACCESS
N.T.S.

ROUGH EARTHWORK QUANTITIES

CUT	460 CYDS
FILL	70 CYDS
EXPORT	390 CYDS

Robert J. Mainiero, P.E.
CIVIL ENGINEERING & RELATED ASSISTANCE
P.O. BOX 2410
PALM SPRINGS, CA 92263
PHONE (760) 413-7127 FAX (760) 992-0702
psbob596@aol.com

REGISTERED PROFESSIONAL ENGINEER
ROBERT J. MAINIERO
C25658
Exp. 12-31-17
CIVIL
STATE OF CALIFORNIA

BENCHMARK: R.M. 31 ELEVATION OF 244.89
2 1/2" BRASS DISK IN THE TOP OF A STORM DRAIN INLET SOUTHEASTERLY OF THE BCR AT THE SOUTHEAST CORNER OF HIGHWAY 111 AND INDIAN TRAIL.
TEMPORARY BENCHMARK----TOP OF CURB RETURN AT EDGE OF PARKING AREA CLOSEST TO THE OBSERVATORY. ELEVATION 233.03

Narkweather ARCHITECTS INC.
73 330 HWY 111, SUITE A / PALM DESERT, CA 92260-4016
PHONE: (760) 346-4090 / E-MAIL: info@narkweather.net

OWNERSHIP OF DOCUMENTS
DRAWINGS AND SPECIFICATIONS AS INSTRUMENTS OF SERVICE ARE AND SHALL REMAIN THE PROPERTY OF THE DESIGNER WHETHER THE PROJECT FOR WHICH THEY WERE PREPARED IS EXECUTED OR NOT. THEY ARE NOT TO BE USED ON OTHER PROJECTS OR EXTENSIONS TO THIS PROJECT EXCEPT BY AGREEMENT IN WRITING AND WITH APPROPRIATE COMPENSATION TO Narkweather Architects Inc.
COPYRIGHT 2016 Narkweather Architects

CITY OF RANCHO MIRAGE
OBSERVATORY
PROJECT DESCRIPTION: Rancho Mirage Public Library
SITE ADDRESS: 71-100 Highway 111, Rancho Mirage, CA 92270

SHEET CONTENT
SITE & GRADING

DRAWING SCALE:
SCALE: 1" = 10.0'

ISSUE DATE		
MONTH	DAY	YEAR
SEPT.	29	2016

1	REVISION DATE:
2	REVISION DATE:
	REVISION DATE:
	REVISION DATE:
	REVISION DATE:

(PLAN CHECK ENGINEER STAMP)
RECOMMENDED FOR APPROVAL BY: DATE
R.C.E. 47159 EXP. 12/31/17
APPROVED BY CITY OF RANCHO MIRAGE: DATE
WILLIAM J. DIAS, CITY ENGINEER
R.C.E. 42968 EXP. 6/30/2017

DRAWING NUMBER
C1
SHEET # 11 OF 56
PRIVATE REFERENCE #
CITY REFERENCE #

Bid Set - 10/07/2016

CONSTRUCTION NOTES

1. PROPOSED CONCRETE ACCESS TO BE 3250 PSI CONCRETE 6" THICK ON 6"" CLASS II B COMPACTED TO CITY STANDARDS SECTIONS SHALL BE NO MORE THAN 10' LONG WITH EXPANSION JOINTS EVERY 10' AND TOOLED JOINTS EVERY 5'. SEE DETAIL THIS SHEET.
2. INSTALL ADA PATH OF TRAVEL & SIGNAGE
3. RELOCATE EXISTING MASONRY BENCHES TO THE OPPOSITE SIDE OF THE LIBRARY ENTRANCE
4. EXISTING CONCRETE PULLBOXES TO REMAIN–PROTECT IN PLACE–ADJUST TO GRADE OF SIDEWALK
5. EXISTING 32"X32" MASONRY COLUMN TO REMAIN–PROTECT IN PLACE
6. EXISTING ELECTRICAL STUB–UPS TO REMAIN–PROTECT IN PLACE– ADJUST TO GRADE AS NECESSARY
7. EXISTING ELECTRICAL VAULT TO REMAIN–PROTECT IN PLACE
8. PROPOSED HANDICAP ACCESS SIGNS
9. EXISTING 8" DIAMETER PEDESTAL LIGHTS TO REMAIN
10. EXISTING FIRE PATH TO BE ADJUSTED TO JOIN PROPOSED ACCESS
11. PROPOSED RAILING PER DETAIL 1/A3.2
12. INSTALL 3' DEEP TRUNCATED DOME SHEETS PER CITY STD DETAIL 502 COLOR–––"RANCHO MIRAGE BROWN"
13. CONCRETE RETAINING WALL PER BUILDING & SAFETY HANDOUT

CONSTRUCTION NOTES FOR WATER AND SEWER

1. CONTRACTOR MUST CONTACT THE CITY OF RANCHO MIRAGE PUBLIC WORKS BEFORE PERFORMING ANY WORK ON THE EXISTING SEWER LINE
2. CONTRACTOR MUST COORDINATE ANY DISRUPTION OF THE EXISTING LIBRARY WATER AND SEWER SYSTEMS WITH THE LIBRARY MAINTENANCE STAFF
3. 1" SCH 40 PVC WATER

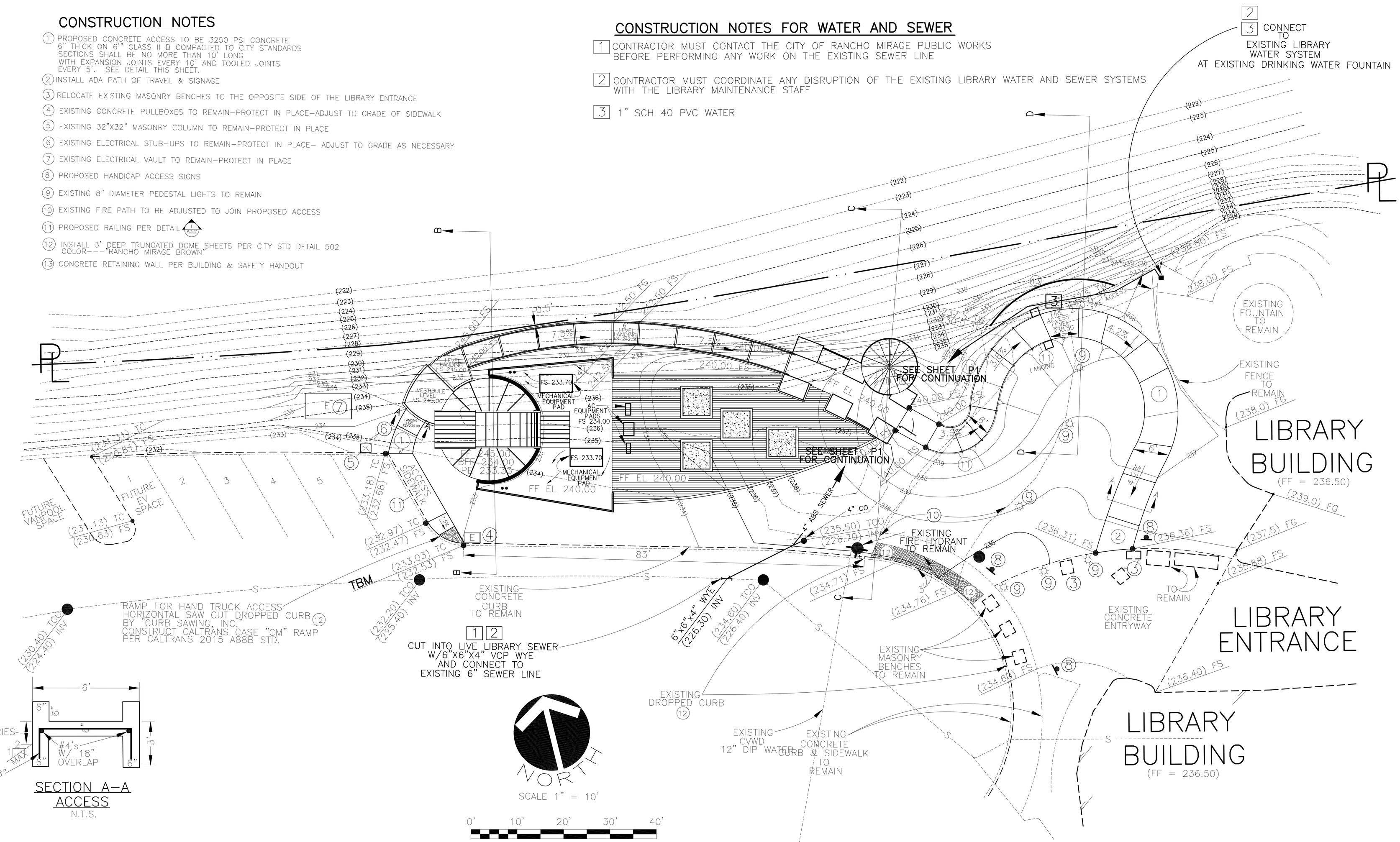

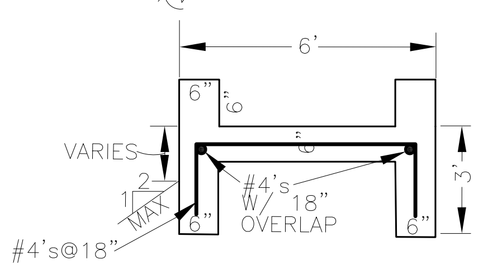

SECTION A–A
ACCESS
N.T.S.

Robert J. Mainiero, P.E.
CIVIL ENGINEERING & RELATED ASSISTANCE
P.O. BOX 2410
PALM SPRINGS, CA 92263
PHONE (760) 413-7127 FAX (760) 992-0702
psbob596@aol.com

REGISTERED PROFESSIONAL ENGINEER ROBERT J. MAINIERO C25658 Exp. 12-31-17 CIVIL STATE OF CALIFORNIA

BENCHMARK: R.M. 31 ELEVATION OF 244.89
2 1/2" BRASS DISK IN THE TOP OF A STORM DRAIN INLET SOUTHEASTERLY OF THE BCR AT THE SOUTHEAST CORNER OF HIGHWAY 111 AND INDIAN TRAIL

Narkweather ARCHITECTS INC.
73 330 HWY 111, SUITE A / PALM DESERT, CA 92260-4016
PHONE: (760) 346-4090 / E-MAIL: info@narkweather.net

OWNERSHIP OF DOCUMENTS DRAWINGS AND SPECIFICATIONS AS INSTRUMENTS OF SERVICE ARE AND SHALL REMAIN THE PROPERTY OF THE DESIGNER WHETHER THE PROJECT FOR WHICH THEY WERE PREPARED IS EXECUTED OR NOT. THEY ARE NOT TO BE USED ON OTHER PROJECTS OR EXTENSIONS TO THIS PROJECT EXCEPT BY AGREEMENT IN WRITING AND WITH APPROPRIATE COMPENSATION TO Narkweather Architects Inc.
COPYRIGHT 2016 Narkweather Architects

CITY OF RANCHO MIRAGE
OBSERVATORY
PROJECT DESCRIPTION Rancho Mirage Public Library
SITE ADDRESS 71-100 Highway 111, Rancho Mirage, CA 92270

SHEET CONTENT
WATER & SEWER PLAN

DRAWING SCALE:
SCALE: 1" = 10.0'

ISSUE DATE		
MONTH	DAY	YEAR
SEPT.	29	2016

1 REVISION DATE:
2 REVISION DATE:
REVISION DATE:
REVISION DATE:
REVISION DATE:

(FOR CITY USE ONLY)
RECOMMENDED FOR APPROVAL BY: DATE
R.C.E. 47159 EXP. 12/31/17
APPROVED BY CITY OF RANCHO MIRAGE: DATE
WILLIAM J. DIOS, CITY ENGINEER
R.E.E. 19908 EXP. 6/30/2017

DRAWING NUMBER
C2
SHEET # 12 OF 56
PRIVATE REFERENCE #
CITY REFERENCE #

Bid Set - 10/07/2016

SECTION B–B
SCALES: VERTICAL 1"=5'
HORIZONTAL 1"=10'

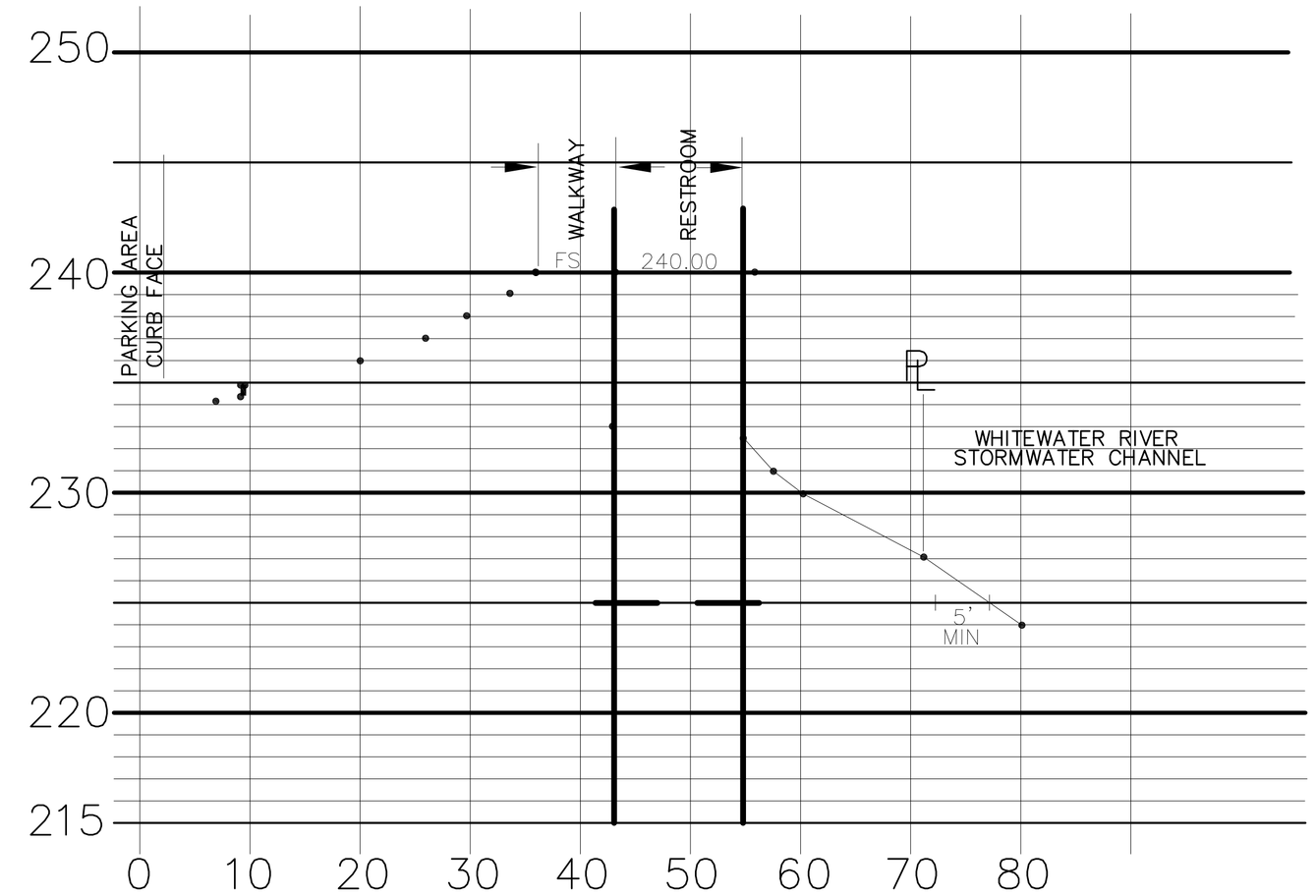

SECTION C–C
SCALES: VERTICAL 1"=5'
HORIZONTAL 1"=10'

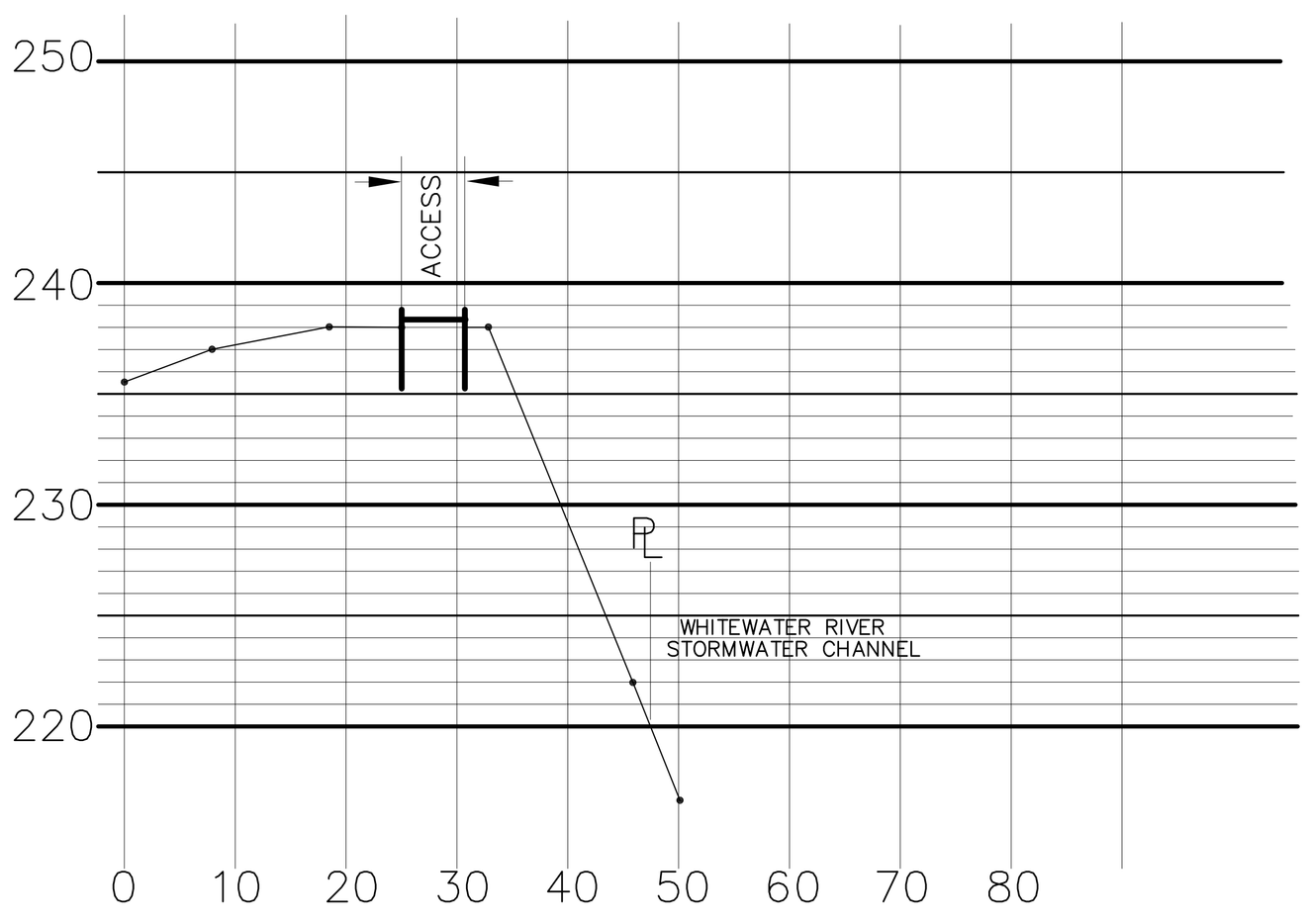

SECTION D–D
SCALES: VERTICAL 1"=5'
HORIZONTAL 1"=10'

Robert J. Mainiero, P.E.
CIVIL ENGINEERING & RELATED ASSISTANCE
P.O. BOX 2410
PALM SPRINGS, CA 92263
PHONE (760) 413-7127 FAX (760) 992-0702
psbob596@aol.com

REGISTERED PROFESSIONAL ENGINEER
ROBERT J. MAINIERO
C25658
Exp. 12-31-17
CIVIL
STATE OF CALIFORNIA

Narkweather
ARCHITECTS INC.
73 330 HWY 111, SUITE A / PALM DESERT, CA 92260-4016
PHONE: (760) 346-4090 / E-MAIL: info@narkweather.net

OWNERSHIP OF DOCUMENTS
DRAWINGS AND SPECIFICATIONS AS INSTRUMENTS OF SERVICE ARE AND SHALL REMAIN THE PROPERTY OF THE DESIGNER WHETHER THE PROJECT FOR WHICH THEY WERE PREPARED IS EXECUTED OR NOT. THEY ARE NOT TO BE USED ON OTHER PROJECTS OR EXTENSIONS TO THIS PROJECT EXCEPT BY AGREEMENT IN WRITING AND WITH APPROPRIATE COMPENSATION TO Narkweather Architects Inc.
COPYRIGHT 2016 Narkweather Architects

CITY OF RANCHO MIRAGE
OBSERVATORY
PROJECT DESCRIPTION Rancho Mirage Public Library
SITE ADDRESS 71-100 Highway 111, Rancho Mirage, CA 92270

SHEET CONTENT
SECTIONS

DRAWING SCALE:
SCALE: AS SHOWN

ISSUE DATE		
MONTH	DAY	YEAR
SEPT.	29	2016

1 REVISION DATE:
2 REVISION DATE:
REVISION DATE:
REVISION DATE:
REVISION DATE:

(PLAN CHECK ENGINEER STAMP)
RECOMMENDED FOR APPROVAL BY:
R.C.E. 47159 EXP. 12/31/17 DATE
APPROVED BY CITY OF RANCHO MIRAGE:
WILLIAM A. ENGS, CITY ENGINEER
R.C.E. 43910, EXP. 6/30/2017 DATE

DRAWING NUMBER
C3
SHEET # 13 OF 56
PRIVATE REFERENCE #
CITY REFERENCE #

Bid Set - 10/07/2016

PLEASE READ AND FILL OUT THIS DOCUMENT APPROPRIATELY. EVEN SMALL PROJECTS MUST DO THEIR PART. PM_{10} DUST (POWDERY DUST OF 10 MICRONS OR SMALLER DIAMETER) HAS BEEN IDENTIFIED AS A POTENTIALLY SERIOUS HEALTH THREAT. THIS FINE DUST CAN LODGE DEEP IN THE LUNGS AND HAS BEEN ASSOCIATED WITH BRONCHITIS AND OTHER RESPIRATORY ILLNESSES. DESERT DUST CAN BE PARTICULARLY UNHEALTHFUL, BEING ASSOCIATED WITH "DESERT LUNG SYNDROME" AND LUNG INFECTIONS CAUSED BY FUNGAL SPORES CARRIED IN DESERT DUST. CHILDREN, THE ELDERLY, AND PERSONS WITH RESPIRATORY CONDITIONS, ARE PARTICULARLY SENSITIVE TO FINE DUST, BUT EVERYONE IS ADVERSELY AFFECTED BY THE RELATIVELY HIGH LEVELS OF PM_{10} THAT OCCUR IN THE COACHELLA VALLEY. LARGER SAND PARTICLES CAN BE TURNED INTO THIS DUST THROUGH THE GRINDING ACTION OF TIRES ON ROADWAYS AND THROUGH REPETITIVE PLOWING AND DISKING OPERATIONS.

PROJECT DATA (SEE ATTACHED PLAN ALSO)

DATE: ___ PROJECT NAME: ___
STREET ADDRESS / SITE LOCATION: ___

ADJOINING PROPERTY INFO. (FOR SENSITIVITY, TYP. WINDS BLOW N.W. TO S.E.)
EASTERLY ___
SOUTHEASTERLY ___
SOUTHERLY ___
SOUTHWESTERLY ___
WESTERLY ___
NORTHWESTERLY ___
NORTHERLY ___
NORTHEASTERLY ___

CURRENT LAND USAGE: ___
PROPOSED LAND USAGE: ___
LOT: ___ TRACT/PM: ___ LAND USE PERMIT NO.: ___
A.P.N. ___ PARCEL SIZE: ___ ACRES ___ SQ. FT.

EARTHWORK QUANTITIES ESTIMATE (BALANCED SITE PREFERRED)

TOTAL AREA TO BE DISTURBED ___ ACRES ___ SQ. FT.
STRIPPING & SUBSIDENCE LOSSES (TYP. 0.3' X AREA/27CF./CY.) ___ C.Y.
RAW CUT VOLUME: ___ C.Y. CUT AFTER SHRINKAGE: ___ C.Y.
RAW IMPORT VOLUME: ___ C.Y. IMPORT AFTER SHRINKAGE: ___ C.Y.
COMPACTED FILL VOLUME: ___ C.Y.
RAW EXPORT VOLUME: ___ C.Y. COMPACTED EXPORT VOL.: ___ C.Y.
(SEE HAUL ROUTE DETAIL ON ATTACHED PLAN IF ANY IMPORT OR EXPORT, EXCEPT TRASH.)

PHASING OF GRADING ACTIVITIES

THE AMOUNT OF ACTIVE DISTURBED AREA MUST BE LIMITED TO WHAT CAN BE EFFECTIVELY WATERED 4 TIMES PER DAY BY EITHER SPRINKLERS OR WATER TRUCKS. TYPICAL 2000 GALLON WATER TRUCKS CAN EFFECTIVELY WATER ABOUT 4 ACRES PER HOUR. THEREFORE AN 8 HR. WORKDAY DIVIDED BY 4 WATERINGS PER DAY TIMES 4 AC./HR. = 8 ACRES PER TRUCK. SINCE WATER TRUCKS ARE ALLOWED TO WORK 7 DAYS A WEEK, 24 HOURS A DAY, IN SOME LOCATIONS, UP TO 24 AC. PER TRUCK MAY BE ACHIEVED THAT WAY, WITH SPECIAL PERMISSION. LARGER PROJECTS MUST HAVE MORE TRUCKS, MORE HOURS, MORE SPRINKLERS, OR LESS DISTURBED AREA AT ANY ONE TIME. AREAS ALREADY GRADED OR STOCKPILED MUST BE STABILIZED WITH CHEMICALS, HYDROMULCH, OR VEGETATION, BEFORE ADDITIONAL AREAS CAN BE STRIPPED FOR GRADING. THE PHASING PATTERN BELOW SHALL BE SHOWN IN THE REFERENCE MAP ON THIS SHEET AT UPPER RIGHT. DRIVING ROUTES THROUGH A PROJECT MUST BE COUNTED IN ALL PHASES WHERE THEY ARE ONLY TREATED WITH WATER. IT IS BETTER TO TREAT THEM WITH AN APPROVED "OIL" (LIKE ENVIROKLEEN) OR SIMILAR NON-CRUSTING DUST PALLIATIVE, TO SAVE WATER.

PHASE "A" ROUGH GRADING (SITE PREPARATION / MOBILIZATION)					
SUB-PHASE	APPROX. DATE	DISTURBED AC.	SPRINKLER AC.	WATER TRUCK AC.	# OF TRUCKS
A1					
A2					
A3					
PHASE "B" ROUGH GRADING (MASS GRADING OF STREETS, PADS, RET. BASINS, PERIMETER WALL)					
SUB-PHASE	APPROX. DATE	DISTURBED AC.	SPRINKLER AC.	WATER TRUCK AC.	# OF TRUCKS
B1					
B2					
B3					
PHASE "C" FINISH GRADING (MAJOR UTILITY AND STREET CONSTRUCTION)					
SUB-PHASE	APPROX. DATE	DISTURBED AC.	SPRINKLER AC.	WATER TRUCK AC.	# OF TRUCKS
C1					
C2					
C3					
PHASE "D" FINISH GRADING (BUILDING UTILITIES, BUILDING CONSTRUCTION, LANDSCAPING)					
SUB-PHASE	APPROX. DATE	DISTURBED AC.	SPRINKLER AC.	WATER TRUCK AC.	# OF TRUCKS
D1					
D2					
D3					

FUGITIVE PM_{10} DUST CONTROL MEASURES

HERE IS THE SUMMARIZED MATRIX OF REQUIRED DUST MITIGATION MEASURES IDENTIFIED BY PHASE:

A	B	C	D	
X				PRE-GRADING SITE WATERING (IRRIGATION SYSTEM FOR MIN. 72 HRS.)
X	X	X	X	SIGNS POSTED ON SITE WITH 24 HR. PHONE NUMBER(S) FOR DUST CONTROLLER
X	X	X	X	SAND FENCING (ON ALL SIDES OF PROJECT LACKING EXISTING MASONRY WALLS)
X	X	X	X	SITE WATERING 7 DAYS A WEEK (IRRIGATION SYSTEM, MIN. 4 TIMES PER 24 HRS., OR BY WATER TRUCKS, MIN. 4 TIMES PER 24 HRS., 1 TRUCK / 8 ACRES)
X	X	X	X	PERIMETER SPRINKLER SYSTEM (ALL SIDES, CONTINUOUS NIGHT WATERING WHEN WINDY)
X	X	X	X	GRAVEL (MIN. 1.5" DIAM. X 4" DEEP AT OFF-STREET STORAGE AND PARKING AREAS)
X	X	X	X	WHEEL CLEANING AT TRUCK EXITS, ("RUMBLE STRIPS", DRIVE-THROUGH PONDS, GRAVEL AREAS, ETC. DETAIL METHOD ON REFERENCE MAP AT AT RIGHT)
X	X	X	X	INACTIVE AREA SOIL STABILIZERS (POLYMER, HYDROMULCH, APPROVED OIL, OR PLANTS)
X	X	X	X	ACTIVE AREA SOIL STABILIZERS (ENVIROKLEEN "OIL", OR SIMILAR WETTING AGENTS)
X	X	X	X	STOP ALL VEHICLE ACTIVITY EXCEPT WATER TRUCKS WHEN WIND > 25 MPH
X	X	X	X	STREET SWEEPING WHENEVER NEEDED
	X	X	X	PERMANENT VEGETATION / LANDSCAPING
	X	X	X	BLOCK WALLS
		X	X	ROAD PAVING

NOTE: THESE CONTROL METHODS ARE DISCUSSED IN DETAIL IN THE "DUST CONTROL PLAN REVIEW GUIDANCE FOR LOCAL GOVERNMENT" FROM THE SOUTH COAST AIR QUALITY MANAGEMENT DISTRICT, AVAILABLE FROM THE CITY OF RANCHO MIRAGE OR THE S.C.A.Q.M.D.

PROJECT RECORDKEEPING/REPORT: RECORD ALL ACTIVITIES, CONTRACTS AND MATERIALS PURCHASES ASSOCIATED WITH BLOWSAND/FUGITIVE DUST PROGRAM. WEEKLY REPORTS SHOULD BE SUBMITTED TO THE PUBLIC WORKS DEPARTMENT FOR REVIEW. THIS "FEEDBACK" WILL EVENTUALLY HELP THE CITY TO DETERMINE WHAT METHODS OF DUST CONTROL ARE MOST COST EFFECTIVE IN BOTH SHORT TERM AND LONG TERM SITUATIONS. SEE THE REPORT FORM THAT'S AVAILABLE FROM THE CITY OR IN THE AFORESAID DOCUMENT.

FUGITIVE PM_{10} DUST CONTROL PROGRAM DETAILS

EACH MITIGATION MEASURE OR CONTROL PROGRAM SHALL BE DESCRIBED IN DETAIL BELOW AND ON ADDITIONAL SHEETS AS NECESSARY. PLEASE USE THE REQUIRED DUST CONTROL PLAN EXHIBIT (AT RIGHT OR ATTACHED) TO INDICATE THE LOCATION OF ON-SITE WATER AVAILABILITY, STAGING AREAS TEMPORARY IRRIGATION LINES, TRUCK/WHEEL WASHERS, TEMPORARY SAND FENCING, CONSTRUCTION PHASING, WORKER'S PARKING AREAS, GRAVELED ENTRANCE/EXIT, AND OTHER THINGS AS NEEDED.

PHASE "A": ROUGH GRADING (SITE PREP. & MOBILIZATION)

GENERAL REQUIREMENTS
1. WRITTEN AND NOTARIZED PERMISSION LETTERS SHALL BE SUBMITTED TO THE PUBLIC WORKS DEPARTMENT FROM ANY ADJACENT LAND OWNERS WHOSE PROPERTY WILL BE USED IN ANY MANNER FOR CONSTRUCTION, STAGING, ACCESS, ETC., PRIOR TO ANY SUCH USAGE. THE OWNER AND AUTHORIZED DUST CONTROLLER FOR THIS PROJECT WILL BE RESPONSIBLE FOR THE DUST CONTROL ON ANY OFF-SITE DISTURBED AREAS AS WELL AS ON THIS PROJECT. A DUST CONTROL SECURITY OF $2,000 PER ACRE, OR AS OTHERWISE APPROVED BY THE CITY ENGINEER, SHALL BE POSTED FOR ALL AREAS TO BE DISTURBED BY THE PROJECT, BOTH ON-SITE AND OFF-SITE. DISTURBANCE OF SITE AREAS NOT INCLUDED IN THIS AGREEMENT SHALL BE REASON FOR THE CITY TO ASSESS ADDITIONAL CHARGES, AND POSSIBLY STOP ALL WORK AT THE SITE UNTIL THE EXTENT OF THE DISTURBANCE IS MEASURED. THEREFORE, IF IT IS SUSPECTED THAT OFF-SITE AREAS MAY BE DISTURBED DURING THE WORK, SHOW THEM ON THIS PLAN AND MAKE THE APPROPRIATE ARRANGEMENTS IN ADVANCE.
2. SAND FENCING, OF EITHER THE WOOD AND WIRE OR THE PLASTIC TYPE, SHALL BE INSTALLED AROUND THE PERIMETER OF THE PROJECT ON ALL SIDES THAT DO NOT HAVE EXISTING MASONRY WALLS OR SIMILAR SOLID FENCING OR HEDGES. THIS SERVES THE MULTIPLE PURPOSES OF: CATCHING SOME WINDBLOWN DUST; REDUCING WIND SPEEDS ON THE PROJECT PERIMETER, AND RESTRICTING VEHICULAR ACCESS POINTS INTO THE PROJECT. THIS RESTRICTED ACCESS HELPS REDUCE DAMAGE TO ANY "CRUST" OF STABILIZED SOIL ON THE PROJECT, AND ALLOWS PLACING OF THE EXIT WHERE "TRACK OUT" CAN BE STOPPED PER #5 BELOW.
3. PRE-WATERING SHALL COMMENCE AT LEAST THREE (3) DAYS PRIOR TO ACTUAL GRADING USING A TEMPORARY ON-SITE IRRIGATION SYSTEM. CONNECTION TO ANY EXISTING WATER SYSTEM SHALL BE DONE IN COMPLIANCE WITH C.V.W.D. TEMPORARY WATER LINES SHALL BE INSTALLED WITH A MINIMAL DISTURBANCE OF ANY OFF-SITE AREAS THEY PASS THROUGH. WHEN THE GRADING BEGINS, A SPRINKLER SYSTEM SHALL BE PLACED AROUND THE PERIMETER OF THE PROJECT, WITH FREQUENT WATERING, ESPECIALLY IN THE TYPICALLY WINDY EVENINGS. PLACING THE PERIMETER SPRINKLERS ON THE SAND FENCE KEEPS THEM SAFE AND EFFECTIVE. WATERING FOR AREAS NOT COVERED BY THE SPRINKLERS SHALL BE PROVIDED BY WATER TRUCKS. (ONE TRUCK PER 8 ACRES FOR 8 HR. WORKDAYS. SEE ABOVE.)
4. ACTIVITY AREAS SUCH AS: EQUIPMENT STORAGE AREA, MATERIALS STORAGE AREA, TEMPORARY OFFICE TRAILERS, AND EMPLOYEE PARKING, SHOULD BE LOCATED IF POSSIBLE ON EXISTING PAVED SURFACES, IF TRAFFIC WOULD NOT BE AFFECTED. IN LIEU OF EXISTING PAVING, A SOIL STABILIZER THAT DOES NOT REQUIRE CONSTANT WATERING, SUCH AS A WASHED GRAVEL, OR "BIODEGRADABLE OIL" COULD BE USED FOR THE INITIAL STAGING AREA. ANY CHEMICALS USED MUST BE CLEARED WITH THE CITY AND REGIONAL WATER QUALITY CONTROL BOARD.

PHASE "A": ROUGH GRADING (SITE PREP. & MOBILIZATION) CONTINUED

5. THE TIRES OF VEHICLES BEING USED ON-SITE SHOULD BE INSPECTED AND WASHED IF NECESSARY TO STOP TRACKING OF DIRT ONTO PUBLIC STREETS. IF EXTENSIVE EXPORT OR IMPORT OF DIRT IS TO BE DONE, A PAVED OR GRAVELED WHEEL WASHING AREA AT LEAST 12' WIDE BY 100' LONG SHOULD BE PROVIDED AT THE EXIT, TO FACILITATE THE INSPECTION AND CLEANING OF TIRES. "RUMBLE STRIPS" MADE FROM LUMBER, RAILROAD TRACK,OR SIMILAR MATERIALS CAN HELP REDUCE THE MUD GETTING ONTO THE CLEANING AREA. STREET SWEEPING AND WASHING IS STILL TYPICALLY REQUIRED, BUT MAY BE REDUCED BY PROPER USE OF A "WHEEL WASHING AREA" LIKE THIS. THEY ARE REQUIRED ON PROJECTS OVER 5 ACRES OR WITH OVER 5,000 CUBIC YARDS OF IMPORT OR EXPORT.
6. A STANDARD SIGN WITH THE FOLLOWING INFORMATION MUST BE POSTED ON THE SITE, AT LEAST ONE SIGN PER FRONTING STREET. THE SIGN MUST INCLUDE: THE GRADING PERMIT NUMBER, THE PROJECT NAME, MAP NUMBER IF APPROPRIATE, THE AUTHORIZED DUST CONTROLLER PHONE NUMBER(S), THE CITY PHONE NUMBER, AND THE SOUTH COAST AIR QUALITY MANAGEMENT DISTRICT (S.C.A.Q.M.D.) PHONE NUMBER. THE SIGNS MUST BE OBTAINED AND INSTALLED BY THE DEVELOPER USING THE SAMPLE FORMAT. THE SIGNS MUST BE PRESENT AT THE PRE-CONSTRUCTION MEETING OR THE GRADING PERMIT WILL NOT BE ISSUED. THE DEVELOPER MUST KEEP THE CONTACT NAME AND PHONE NUMBER ACTIVE AND CURRENT AT ALL TIMES. FAILURE OF THE CONTACT SYSTEM MAY BE CONSIDERED GROUNDS FOR TEMPORARY OR PERMANENT CANCELLATION OF THE PERMIT.
7. VEHICLES TRAVELING ON DIRT AND/OR ON UNPAVED ROADS SHOULD RESTRICT THEIR SPEED TO 15 M.P.H. MAXIMUM. SIGNS TO THAT EFFECT SHOULD BE PLACED AT THE PROJECT ENTRANCE ON PROJECTS OVER 5 ACRES TO IMPROVE COMPLIANCE.
8. WHEN WIND SPEEDS EXCEED 25 MPH, BY CONTINUOUS ANEMOMETER READING, OR IN GUSTS AT LEAST TWICE WITHIN A THIRTY MINUTE PERIOD, MEASURED ON THE SITE, VEHICULAR ACTIVITY ON THE SITE SHALL CEASE, EITHER VOLUNTARILY, OR BY CITY OR A.Q.M.D. INSPECTOR NOTIFICATION, EXCEPT FOR WATER TRUCKS AND SPRINKLER-TENDING VEHICLES, IF ANY.

SITE SPECIFIC DETAILS:
(PLEASE DESCRIBE ANY SPECIFIC OR ADDITIONAL CONTROL MEASURE PROPOSED.)
1. PRE-WATERING METHOD (AS SHOWN IN 3. OR AS DETAILED HERE): ___
WATER AVAILABILITY, INITIAL STAGE ___
2. OFF-SITE WORK PERMISSION NEEDED: ___
3. ACCESS WILL BE CONTROLLED BY: ___
4. INITIAL STAGING AREA: ___
EQUIPMENT STORAGE ___
TEMPORARY OFFICE ___
EMPLOYEE PARKING ___
5. WHEEL WASHING PROVISIONS: ___
6. SPEED RESTRICTION SIGN LOCATION: ___
7. NUMBER OF POSTED "DUST CONTROL SIGNS" ___ (TYP. 1 PER FRONTING ROAD OR 1 PER 660 FEET OF FRONTAGE)
8. OTHER PRELIMINARY WORK: ___

PHASE "B": ROUGH GRADING (MASS GRADING, PERIMETER WALLS)

GENERAL REQUIREMENTS
1. HAULING PROCEDURES:
ALL VEHICLES GOING FROM DIRT AREAS ONTO PAVED STREETS SHALL HAVE TIRES AND WHEELS INSPECTED AND WASHED IF NECESSARY TO AVOID "TRACKING-OUT" DIRT.
TRUCKS HAULING DIRT ON PAVED STREETS SHALL MAINTAIN AT LEAST A HALF FOOT "FREEBOARD" FROM RIM TO DIRT, AND COVER ALL DIRT OR DUSTY DEBRIS LOADS WITH AN APPROPRIATE TARP.
THE HAUL ROUTE SHOULD BE SHOWN HEREON OR ON AN ATTACHED SHEET, AND SHALL BE CLEARED WITH THE CITY ENGINEER FOR ANY APPLICABLE TRANSPORT PERMITS PRIOR TO ITS USE. ALL HAULING TRUCKS SHALL HAVE A COPY OF THESE PROVISIONS WITH THEM AT ALL TIMES.
THE IMPORT OR EXPORT SITE MUST HAVE A VALID GRADING PERMIT ALSO, AND SHOULD BE COMPLYING WITH ALL APPROPRIATE DUST MITIGATION MEASURES ALSO.
WHEN PRACTICAL, TRUCKS AND EQUIPMENT, SHOULD SHUT OFF ENGINES RATHER THAN IDLING FOR EXTENDED PERIODS, TO MINIMIZE EXHAUST EMISSIONS AND NOISE. THIS BECOMES MORE CRITICAL AS THE SIZE AND NUMBERS OF VEHICLES INCREASES.
2. ALL STRIPPED, GRADED OR OTHERWISE DISTURBED AREAS SHALL BE STABILIZED BY SOME APPROPRIATE MEANS. AREAS ACTIVELY BEING GRADED CAN USUALLY BE STABILIZED BY APPLYING LOTS OF WATER. DISTURBED AREAS NOT ACTIVELY BEING WORKED MAY BE EFFECTIVELY TREATED WITH SOME MORE DURABLE SOIL STABILIZER, SUCH AS HYDROMULCH, TO AVOID CONSTANT WATERING. THE PREFERRED METHOD OF SITE WATERING IS BY SPRINKLER, ESPECIALLY AROUND THE PERIMETER. SPRINKLERS MUST BE SET TO RUN ON WEEKENDS AND EVENINGS WHEN WATER TRUCK DRIVERS ARE NOT AVAILABLE. A TYPICAL WATER TRUCK CAN ONLY HANDLE WELL ABOUT 4 ACRES PER HOUR.
3. IF PERIMETER BLOCK WALLS ARE TO BE BUILT THEY SHOULD BE GIVEN A HIGH PRIORITY SINCE THEY WILL HELP TO CATCH BLOWSAND AND COULD THEREBY REDUCE THE AMOUNT OF STREET SWEEPING REQUIRED.

SITE SPECIFIC DETAILS:
(PLEASE DESCRIBE ANY SPECIFIC OR ADDITIONAL CONTROL MEASURE PROPOSED.)
1. HAULING PROCEDURES: (AS SHOWN ABOVE UNLESS OTHERWISE DETAILED) ___
2. SOIL STABILIZATION METHODS:
ACTIVE AREA WATER SCHEDULE: (MIN. 4 TIMES PER 24 HRS.) ___
WEEKEND WATERING SCHEDULE: (MIN. 4 TIMES PER 24 HRS.) ___
INACTIVE AREA STABILIZATION METHOD(S): (ACRYLIC POLYMER, HYDROMULCH, PLANTINGS, BIODEGRADABLE "OIL", OR AS SHOWN HERE) ___
3. PERIMETER BLOCK WALL SCHEDULE: ___
4. OTHER: ___

PHASE "C": FINISH GRADING (UTILITY & STREET CONST.)

GENERAL REQUIREMENTS:
1. DIRT STOCKPILED NEXT TO UTILITY TRENCHES SHALL BE KEPT WATERED OR OTHERWISE STABILIZED OR COVERED TO HELP COUNTERACT THEIR HIGH PROFILE EXPOSURE TO THE WIND.
2. ALL PREVIOUSLY ROUGH GRADED AREAS THAT WILL BE INACTIVE IN THIS PHASE SHOULD BE TREATED WITH A DURABLE SOIL STABILIZER OR GROUND COVER SYSTEM. IF A VEGETATED GROUND COVER IS UTILIZED IT IS ONLY NECESSARY TO GET IT INITIALLY ESTABLISHED. THE ROOT SYSTEM AND TOP STUBBLE MAY BE SUFFICIENT TO HOLD THE DUST EVEN IF WATERING IS DISCONTINUED.
3. FOR TRACTS, MULTIPLE PARCELS, AND EXTENSIVE COMMERCIAL SITES, PAVED ACCESS TO THE BUILDING SITES WILL BE REQUIRED PRIOR TO FRAMING OF THE BUILDINGS. THIS CONSTRUCTION STAGE USUALLY INDICATES AN INCREASE IN THE NUMBERS OF WORKERS AND THEIR VEHICLES. ALSO, THE PAVED ACCESS IS RECOMMENDED FOR FIRE FIGHTING PURPOSES. IF PAVING IS DESIRED BEFORE ALL UTILITIES AND/OR LATERALS ARE INSTALLED, THE BASE LIFT OF ASPHALT IS SUFFICIENT FOR ACCESS. THE A.C. CAN BE "CAPPED" LATER, LEAVING A FINAL SURFACE THAT IS FREE OF UTILITY CUTS AND PATCHES.
4. AS PAVED ACCESS IS EXTENDED, THE STAGING AREA CAN BE MOVED CLOSER TO THE BUILDING SITES. THE STORAGE AND OFFICE TRAILERS, EQUIPMENT, AND EMPLOYEE PARKING CAN BE MOVED ONTO PAVED PORTIONS OF THE SITE.

SITE SPECIFIC DETAILS:
(PLEASE DESCRIBE ANY SPECIFIC OR ADDITIONAL CONTROL MEASURE PROPOSED.)
1. TRENCH STOCKPILE TREATMENT: (WATER AS NECESSARY) ___
2. INACTIVE AREA TREATMENT: (SEAL WITH HYDROMULCH, ACRYLIC POLYMER, PLANTINGS, ETC.) ___
3. STREET PAVING SCHEDULE: ___
4. STAGING AREA MOVEMENT SCHEDULE: ___
5. OTHER: ___

PHASE "D": FINISH GRADING (BLDG. UTIL., BLDG. CONST., LANDSCAPING)

GENERAL REQUIREMENTS:
1. ALL INACTIVE AREAS SHOULD HAVE BEEN STABILIZED BY THIS STAGE. IF PREVIOUSLY COVERED, THE ACTUAL BUILDING PADS MAY NOW NEED TO BE STRIPPED, SCARIFIED, AND RECOMPACTED FOR BUILDING PAD COMPACTION AND ELEVATION CERTIFICATIONS. DUST WOULD BE KEPT DOWN BY WATERING, USUALLY BY TEMPORARY SPRINKLERS.
2. TRENCHING FOR BUILDING UTILITIES, DRYWELL CONSTRUCTION, POOLS, AND TENNIS COURT CONSTRUCTION FORM THE BULK OF EARTHWORK AFTER THE PADS HAVE BEEN CERTIFIED. TEMPORARY SPRINKLERS MAY STILL BE USED ON THE BUILDING SITE FOR DUST CONTROL PRIOR TO THE BEGINNING OF FRAMING. TREATMENT WITH A BIODEGRADABLE "OIL" APPROVED FOR DUST CONTROL IS RECOMMENDED WHERE IT IS DIFFICULT TO WATER.
3. ESTABLISHING THE LANDSCAPE AND SPRINKLER SYSTEM AROUND THE PERIMETER OF LARGE PROJECTS SHOULD BE DONE AT THIS STAGE. PLANTINGS AROUND THE PERIMETER SERVE AS A WIND BUFFER AND COLLECTION SYSTEM FOR DUST AND SAND. IT IS GOOD TO HAVE DUST AND SAND WELL UNDER CONTROL PRIOR TO THE BUILDING PHASE FOR THE SAKE OF CERTAIN GLUING AND PAINTING PROCESSES THAT CAN BE RUINED BY BLOWSAND OR DUST.
4. DISTURBED AREAS AROUND BUILDINGS SHOULD BE WATERED BY HAND FOR DUST CONTROL UNTIL SUCH TIME THAT THE SPRINKLER SYSTEM IS FULLY FUNCTIONAL AND GROUND COVER AND/OR LANDSCAPING IS ESTABLISHED. IF WATERING IS DIFFICULT DUE TO BUILDING INTERFERENCE, CHEMICAL OR MULCH TREATMENTS ARE AVAILABLE THAT CAN STABILIZE THE SOIL WITHOUT FREQUENT WATERING.
5. CONSTRUCTION DUST SUCH AS FROM CEMENT, PLASTER, PAINT OVERSPRAY, WOOD CUTTING, GRINDING OPERATIONS, ETC., SHOULD BE MINIMIZED ALSO. A PERIMETER BARRIER OF SPRINKLERS AND PLANTINGS CAN SERVE TO CATCH SOME OF THIS POTENTIALLY HAZARDOUS MATERIAL AS WELL AS NATURAL DUST AND BLOWSAND. CONCENTRATIONS OF CONSTRUCTION DUSTS CAN RESULT FROM WASHING OF EQUIPMENT AND SHOULD BE PROPERLY DISPOSED OF BEFORE THEY CAN DRY OUT AND BLOW OR BE WASHED ACROSS PROJECT BOUNDARIES.
6. NOTE THAT SWALES SHOULD BE INSPECTED BY CITY PRIOR TO SETTING OF PERMANENT GROUND COVER OR OTHER PLANTS.

SITE SPECIFIC DETAILS:
(PLEASE DESCRIBE ANY SPECIFIC OR ADDITIONAL CONTROL MEASURE PROPOSED.)
1. BUILDING PAD WATERING: (BY HAND WATERING AS NECESSARY AROUND BUILDING SITE) ___
2. FORMWORK AND TRENCH WATERING: (BY HAND WATERING AS NECESSARY) ___
3. PERIMETER LANDSCAPE SCHEDULE: (AS SOON AS POSSIBLE) ___
4. OTHER: ___

ABATEMENT OF DUST MITIGATION FAILURE

AN IRREVOCABLE LICENSE IS HEREBY GRANTED OR CAUSED TO BE GRANTED TO PERMIT THE CITY OR THEIR DESIGNEE TO ENTER UPON THE SITE UNDER THE FOLLOWING CIRCUMSTANCES:
A. IN THE EVENT THAT WIND SPEEDS IN EXCESS OF 25 M.P.H. ARE FORECAST TO OCCUR BY THE SOUTH COAST AIR QUALITY MANAGEMENT DISTRICT (S.C.A.Q.M.D.) FOR A PARTICULAR DAY;
B. IN THE EVENT OF AN ON-SITE ANEMOMETER THAT CONFORMS TO ALL S.C.A.Q.M.D. STANDARDS REGISTERING 2 WIND GUSTS IN EXCESS OF 25 M.P.H. WITHIN A CONSECUTIVE 30 MINUTE PERIOD; OR
C. IN THE EVENT FUGITIVE DUST EMISSIONS ARE VISIBLE FOR A DISTANCE OF 50 FEET FROM ANY BOUNDARY LINE; OR
D. THE CITY IS UNABLE, BY TELEPHONE, TO ESTABLISH A PERSONAL CONTACT WITH THE "AUTHORIZED DUST CONTROLLER" AFTER A 60 MINUTE CONSECUTIVE PERIOD WHICH SHALL START WITH THE FIRST TELEPHONE CALL, WHETHER ANSWERED OR NOT; THEN THE CITY WILL UNDERTAKE TO INITIATE ONE OR ALL OF THE BELOW LISTED ACTIONS:
1. THE CITY WILL CAUSE THE CESSATION OF ANY ON-SITE ACTIVITY, INCLUDING BUT NOT LIMITED TO EARTH MOVING, CONSTRUCTION, DEMOLITION OR VEHICULAR MOVEMENT AND MANEUVERING. ANY WATER TRUCKS OR VEHICLES SERVICING SPRINKLERS WOULD CONTINUE.
2. IN THE EVENT THAT AN ON-SITE IRRIGATION SYSTEM IS NOT INSTALLED AND/OR OPERATIONAL, THE CITY WILL CAUSE THE SITE TO BE WATERED OR TREATED WITH DUST CONTROL CHEMICALS. THE DUST CONTROL SECURITY WILL BE UTILIZED FIRST TO COVER ANY COSTS INCURRED. IF COSTS EXCEED ANY DUST CONTROL SECURITY REMAINING, ADDITIONAL COSTS MAY BE ASSESSED AGAINST THE OWNER OF THE PROJECT.
3. IN THE EVENT AN ON-SITE IRRIGATION SYSTEM IS INSTALLED, BUT ITS CONTROL CLOCK HAS NOT TURNED THE SYSTEM ON WHEN NEEDED, THE CITY MAY TAKE ALL NECESSARY STEPS TO TURN ON THE SYSTEM. IF IT IS INACCESSIBLE BEHIND LOCKED GATES OR LOCKED CONTROL BOXES, AND THE CITY CAN NOT FIND THE APPROPRIATE KEYS, THE CITY MAY CUT OR BREAK LOCKS AS NECESSARY.

E. IF, IN THE OPINION OF THE CITY ENGINEER OR HIS DESIGNEE, THE INTENSITY, FREQUENCY OR DURATION OF FUGITIVE DUST EMISSIONS FROM THE SITE CONSTITUTES A HAZARD TO THE SAFETY OF THE PUBLIC, BY INTRUSION BEYOND THE PROJECT BOUNDARY, THE CITY ENGINEER OR HIS DESIGNEE OR AGENT MAY IMMEDIATELY ENTER UPON THE SITE OR IMMEDIATELY TAKE OTHER SUCH ACTION AS MAY BE NECESSARY TO REMEDY THE HAZARD, SUCH AS, BUT NOT LIMITED TO COMMENCING WATERING ON THE SITE OR ORDERING THE CESSATION OF ANY EMISSION-GENERATING ACTIVITY OCCURRING ON-SITE.
F. ANY OF THE ABOVE ACTIONS MAY BE CONSTRUED AS AN ABATEMENT FOR WHICH THE CITY WILL "BACK CHARGE" THE GENERAL CONTRACTOR, DEVELOPER, AND/OR THE OWNER AS THE CITY SHALL DEEM APPROPRIATE.

APPLICATION CONSENT

APPLICATION FOR APPROVAL OF A LOCAL AIR QUALITY MANAGEMENT (L.A.Q.M.P.) PLAN IS HEREBY MADE TO THE CITY ENGINEER OR HIS DESIGNEE, AS PART OF A GRADING PERMIT APPLICATION, SUBJECT TO THE CONDITIONS AND RESTRICTIONS SET FORTH HEREIN:
1. EACH PERSON UPON WHOSE BEHALF THIS APPLICATION IS MADE AND EACH PERSON AT WHOSE REQUEST AND FOR WHOSE BENEFIT WORK IS PERFORMED UNDER AND PURSUANT TO ANY PERMIT ISSUED AS A RESULT OF THIS APPLICATION AGREES TO, AND SHALL INDEMNIFY AND HOLD HARMLESS THE CITY OF RANCHO MIRAGE, ITS OFFICERS, AGENTS AND EMPLOYEES.
2. ANY PERMIT ISSUED AS A RESULT OF THIS APPLICATION BECOMES NULL AND VOID IF WORK IS NOT COMMENCED WITHIN 90 DAYS FROM THE DATE OF ISSUANCE OF SUCH PERMIT.
3. THE APPLICANT, OWNER, CONTRACTOR(S), SUBCONTRACTOR(S) OR OTHER AGENTS, HEIRS OR ASSIGNEES SHALL CONFORM TO THE ATTACHED DUST CONTROL PLAN AS APPROVED BY THE CITY. SAID PLAN INCLUDES NOTES AND/OR DRAWINGS OF TEMPORARY OR PERMANENT CONTROL METHODS OR DEVICES PROPOSED TO BE USED. THIS L.A.Q.M.P. SHALL BE CONSIDERED AN ADDENDUM TO, AND A NECESSARY PART OF, ANY GRADING, STOCKPILE, IMPROVEMENT, OR DEMOLITION PLAN OTHERWISE REQUIRED FOR CITY PERMITS.
4. BY AGREEING TO CONFORM TO THIS PLAN AS APPROVED BY THE CITY, THE OWNER AND DESIGNATED "AUTHORIZED DUST CONTROLLER" DO ALSO AGREE TO ABIDE BY THE PROVISIONS OF THE ABATEMENT PROCEDURES AS SHOWN ABOVE.

OWNER'S CERTIFICATION:

I CERTIFY THAT I HAVE READ THIS APPLICATION AND UNDERSTAND THAT I AM RESPONSIBLE FOR THE COMPLIANCE OF THIS PROJECT TO THE DUST CONTROL PROVISIONS NOTED OR REFERENCED HERE. I UNDERSTAND THAT THE DUST CONTROL SECURITY THAT I'VE POSTED WITH THE CITY MAY BE USED BY THE CITY, PLUS ADDITIONAL CHARGES IF NEEDED, IF I FAIL TO KEEP THE DUST UNDER CONTROL. I UNDERSTAND THAT DUST CONTROL IS REQUIRED 24 HOURS A DAY, 7 DAYS A WEEK, FROM THE TIME THAT THIS SITE IS DISTURBED IN ANY WAY FROM THE NATURAL VEGETATED CONDITION, AND MUST CONTINUE UNTIL THE TIME THAT THE PROJECT SITE IS ACCEPTABLY RE-VEGETATED OR PAVED. RESPONSIBILITY FOR THE DUST CONTROL ON THIS SITE CAN NOT BE TRANSFERRED SOLELY BY TRANSFERRING ALL OR A PORTION OF THIS PROPERTY TO OTHER PEOPLE. A REPLACEMENT L.A.Q.M.P. AND DUST CONTROL SECURITY MUST BE SUBMITTED FOR ANY TRANSFERRED PORTION. I HEREBY AUTHORIZE THE PERSON LISTED BELOW AS "AUTHORIZED DUST CONTROLLER" TO BE MY REPRESENTATIVE AND CONTACT PERSON FOR ALL DUST COMPLAINTS INVOLVING THIS PROJECT. I CERTIFY THAT I HAVE READ THIS APPLICATION AND THAT THE INFORMATION CONTAINED HEREIN IS TRUE AND CORRECT. I AGREE TO COMPLY WITH CITY ORDINANCE 398 (MUNI. CODE SEC. 15.32) AND ALL LAWS RELATING TO GRADING OPERATIONS. I AUTHORIZE REPRESENTATIVES OF THE CITY OF RANCHO MIRAGE TO ENTER UPON THE ABOVE-MENTIONED PROPERTY FOR INSPECTION AND/OR ABATEMENT PURPOSES, AND I AGREE TO HOLD HARMLESS THE CITY AND ITS REPRESENTATIVES FROM LIABILITY FOR ANY ACTIONS RELATED TO THIS PERMIT.

OWNER'S NAME(S) ___
OWNER'S ADDRESS ___
OWNER'S SIGNATURE(S) ___
DATE ___

AUTHORIZED DUST CONTROLLER CERTIFICATION: # ___

I CERTIFY THAT I HAVE READ THIS APPLICATION AND UNDERSTAND THAT I AM RESPONSIBLE FOR THE COMPLIANCE OF THIS PROJECT TO THE DUST CONTROL PROVISIONS NOTED OR REFERENCED HERE. AS THE "AUTHORIZED DUST CONTROLLER" FOR THIS PROJECT I WILL HAVE MY PHONE NUMBER ON THE REQUIRED SITE SIGNS, AND WILL RESPOND TO DUST COMPLAINTS WITHIN THE 1 HOUR LIMIT. I UNDERSTAND THAT DUST CONTROL IS REQUIRED 24 HOURS A DAY, 7 DAYS A WEEK, FROM THE TIME THAT THIS SITE IS DISTURBED IN ANY WAY FROM THE NATURAL VEGETATED CONDITION, AND MUST CONTINUE UNTIL THE TIME THAT THE PROJECT SITE IS ACCEPTABLY RE-VEGETATED OR PAVED.

DUST CONTROLLER NAME (PRINT) ___
DUST CONTROLLER ADDRESS ___
DUST CONTROLLER SIGNATURE ___ DATE ___
CONTACT PHONE NUMBERS (24HR) ___

COPYRIGHTED CITY LOGO

CITY OF RANCHO MIRAGE
PERMIT # E1300###
DEVELOPER'S NAME
PROJECT NAME / TRACT #####
IF YOU SEE DUST COMING FROM
THIS PROJECT CALL:
24 HR. NAME, PH. ###-###-####
IF YOU DO NOT GET A RESPONSE WITHIN ONE HOUR, PLEASE CALL
THE CITY OF RANCHO MIRAGE PUBLIC WORKS AT 760-770-3224
AND CALL THE A.Q.M.D. AT 1-800-CUT-SMOG (1-800-288-7664)

CONTRASTING COLOR, TYPICALLY BLACK LETTERS ON WHITE BACKGROUND

SIGN AND LETTER SIZE CRITERIA			
PROJECT SIZE	0-1 ACRE	1-10 ACRE	OVER 10 ACRE
SIGN SIZE	24"Hx36"W	36"Hx48"W	48"Hx96"W
	2"	3"	4"
	2"	3"	4"
	2"	3"	4"
	2"	3"	4"
	2"	3"	4"
	3"	4.5"	6"
	1.5"	2.25"	3"
	1.5"	2.25"	3"
	1.5"	2.25"	3"

DUST CONTROL SIGN CRITERIA

ADD A DRAWING HERE FOR SPECIAL DUST CONTROL ITEMS NOT TYPICALLY SHOWN ON GRADING PLANS, SUCH AS: TRUCK WHEEL WASH AREAS, EMPLOYEE PARKING AREAS, WATER TOWER LOCATIONS, HAUL ROAD DETAILS, SPEED SIGN LOCATION, SAND FENCE LOCATIONS, PERIMETER SPRINKLER LOCATIONS, STAGING AREAS, BORROW PITS, ETC. IF ALL REQUIRED FEATURES ARE ALREADY SHOWN ON THE GRADING PLAN WHICH IS ATTACHED, OWNER INITIAL HERE ___

REFERENCE MAP / GRADING PLAN FEATURES

SCALE ___ = ___

SHOW THE ROADS WHICH WILL BE USED FOR IMPORT OR EXPORT OF DIRT FOR THE PROJECT. IF THE PLANS INDICATE A DIRT BALANCE AND THUS NO HAUL ROUTE IS REQUIRED, OWNER INITIAL HERE ___

VICINITY MAP / HAUL ROUTE

NOT TO SCALE

NOTE: PROJECTS OF 10 ACRES OR LARGER MUST ALSO FILE THE 8.5"x11" FORM WITH THE SOUTH COAST AIR QUALITY MANAGEMENT DISTRICT (SEE THEIR WEB SITE OR CITY ENGINEERING FOR APPROPRIATE FORMS)

FORM REVISED 7/2/2014

CITY OF RANCHO MIRAGE
LOCAL AIR QUALITY MANAGEMENT PLAN
PM_{10} DUST MITIGATION

PROJECT NAME ___
SITE ADDRESS ___ A.P.N. ___
SEC.___, T.___S., R.___E., S.B.& M.

REGISTERED PROFESSIONAL ENGINEER
ROBERT J. MAINIERO
C25658
Exp. 12-31-17
CIVIL
STATE OF CALIFORNIA

REGISTERED PROFESSIONAL ENGINEER
ROBERT J. MAINIERO
C25658
Exp. 12-31-17
CIVIL
STATE OF CALIFORNIA

Robert J. Mainiero, P.E.
CIVIL ENGINEERING & RELATED ASSISTANCE
P.O. BOX 2410
PALM SPRINGS, CA 92263
PHONE (760) 413-7127 FAX (760) 992-0702
psbob596@aol.com

Narkweather
ARCHITECTS INC.
73 330 HWY 111, SUITE A / PALM DESERT, CA 92260-4016
PHONE: (760) 346-4090 / E-MAIL: info@narkweather.net

OWNERSHIP OF DOCUMENTS
DRAWINGS AND SPECIFICATIONS AS INSTRUMENTS OF SERVICE ARE AND SHALL REMAIN THE PROPERTY OF THE DESIGNER WHETHER THE PROJECT FOR WHICH THEY WERE PREPARED IS EXECUTED OR NOT. THEY ARE NOT TO BE USED ON OTHER PROJECTS OR EXTENSIONS TO THIS PROJECT EXCEPT BY AGREEMENT IN WRITING AND WITH APPROPRIATE COMPENSATION TO Narkweather Architects Inc.
COPYRIGHT 2016 Narkweather Architects

CITY OF RANCHO MIRAGE
PROJECT DESCRIPTION: OBSERVATORY
Rancho Mirage Public Library
SITE ADDRESS: 71-100 California 111, Rancho Mirage, CA 92270

SHEET CONTENT
PM-10

DRAWING SCALE:
SCALE: NTS

ISSUE DATE		
MONTH	DAY	YEAR
SEPT.	29	2016

1 REVISION DATE:
2 REVISION DATE:
REVISION DATE:
REVISION DATE:
REVISION DATE:

(PLAN CHECK ENGINEER STAMP)
RECOMMENDED FOR APPROVAL BY:
LELAND E. COLE 9/27/16
DATE
R.C.E. 47159 EXP. 12/31/17
APPROVED BY CITY OF RANCHO MIRAGE:
WILLIAM A. ENOS, CITY ENGINEER DATE
R.C.E. 43910, EXP. 6/30/2017

DRAWING NUMBER
C4
SHEET # 14 OF 56
PRIVATE REFERENCE #
CITY REFERENCE #

Bid Set - 10/07/2016

CITY OF RANCHO MIRAGE

GENERAL NOTES

1. ALL WORK SHALL BE DONE IN ACCORDANCE WITH THE STANDARD PLANS OF THE CITY OF RANCHO MIRAGE AND THE STANDARD SPECIFICATIONS FOR PUBLIC WORKS CONSTRUCTION, LATEST EDITION, AND OTHER STANDARD PLANS AS SPECIFIED IN THE PLANS.
2. NOTHING IN THESE PLANS SHALL RELIEVE THE CONTRACTOR FROM OBTAINING PERMITS AS REQUIRED BY THE CITY OF RANCHO MIRAGE MUNICIPAL CODE.
3. THE LOCATIONS OF EXISTING UNDERGROUND UTILITIES ARE SHOWN IN AN APPROXIMATE WAY ONLY. THE CONTRACTOR SHALL DETERMINE THE EXACT LOCATION OF ALL EXISTING UTILITIES BEFORE COMMENCING WORK. HE AGREES TO BE FULLY RESPONSIBLE FOR ANY AND ALL DAMAGES WHICH MIGHT BE OCCASIONED BY HIS FAILURE TO LOCATE AND PRESERVE ANY AND ALL UNDERGROUND UTILITIES.
4. THE CONTRACTOR SHALL BE RESPONSIBLE FOR THE REMOVAL, REPLACEMENT, PROTECTION, OR RELOCATION OF ALL REGULATORY, WARNING, AND GUIDE SIGNS, STRIPING, AND PAVEMENT LEGENDS.
5. STREET NAME SIGNS AND TRAFFIC CONTROL SIGNS, TYPE AND LOCATION SHALL BE APPROVED BY THE CITY ENGINEER. TRAFFIC STRIPING, LEGENDS AND PAVEMENT MARKERS, TYPE AND LOCATIONS SHALL BE APPROVED BY THE CITY ENGINEER.
6. PRIOR TO GRADING OPERATIONS ALL PROPERTY BOUNDARIES SHALL BE VISIBLY MARKED BY SETTING WITNESS STAKES AT ALL FOUND PROPERTY MONUMENTS. FOUND MONUMENTS SHALL BE NOTED OF THE PLANS. RESETTING OF MISSING MONUMENTS OR ANY REMOVAL/REPLACEMENT OF EXISTING MONUMENTS SHALL BE DONE BY AN R.C.E. BELOW 33965 OR L.S. ONLY. THE CONTRACTOR SHALL NOT DISTURB EXISTING MONUMENTS NOTED ON PLANS OR FOUND DURING CONSTRUCTION.
7. ALL STREET SECTIONS ARE TENTATIVE, THE MINIMUM SECTION IS 3" A.C./ 4" A.B. ADDITIONAL SOIL TEST MAY BE TAKEN AFTER ROUGH GRADING TO DETERMINE EXACT SECTION REQUIREMENTS.
8. LOCATIONS OF FIELD DENSITY TEST SHALL BE DETERMINED BY THE CITY OR APPROVED TESTING AGENCY AND SHALL BE SUFFICIENT IN BOTH HORIZONTAL AND VERTICAL PLACEMENT TO PROVIDE REPRESENTATIVE TESTING OF ALL FILL PLACED. TESTING IN AREAS OF A CRITICAL NATURE OR SPECIAL EMPHASIS SHALL BE IN ADDITION TO THE NORMAL REPRESENTATIVE SAMPLINGS.
9. ALL UNDERGROUND FACILITIES, WITH LATERALS, SHALL BE IN PLACE AND INSPECTED PRIOR TO PAVING. INCLUDING, BUT NOT LIMITED TO THE FOLLOWING: SEWER, WATER, ELECTRIC, GAS, TELEPHONE AND DRAINAGE.
10. THE DESIGN CIVIL ENGINEER SHALL EXERCISE SUFFICIENT CONTROL OF THE CONSTRUCTION TO ENSURE COMPLIANCE WITH PLANS, SPECIFICATIONS AND CITY CODES.
11. THE FINAL UTILITY LINE BACKFILL REPORT FROM THE PROJECT SOIL ENGINEER SHALL INCLUDE AN APPROVAL STATEMENT THAT THE BACKFILL IS SUITABLE FOR THE INTENDED USE.
12. THE FINAL COMPACTION REPORT AND APPROVAL FROM THE SOILS ENGINEER SHALL CONTAIN THE TYPE OF FIELD TESTING PERFORMED. EACH TEST SHALL BE IDENTIFIED WITH THE METHOD OF OBTAINING THE IN-PLACE DENSITY, WHETHER SAND CONE OR DRIVE RING AND SHALL BE PERFORMED TO VERIFY THE ACCURACY OF THE MAXIMUM DENSITY CURVES BY THE FIELD TECHNICIAN.
13. ALL CONSTRUCTION AREAS SHALL BE PROPERLY POSTED AND LIGHTED IN CONFORMANCE WITH THE STATE MANUAL OF WARNING SIGNS, LIGHTS, AND DEVICES FOR USE IN THE PERFORMANCE OF WORK UPON HIGHWAYS, IN ORDER TO ELIMINATE ANY HAZARDS.
14. AT NO TIME WILL PRIVATE PROPERTY BE USED IN CONJUNCTION WITH THE PROJECT UNLESS PROPERTY-OWNER APPROVAL IS OBTAINED IN WRITING AND GIVEN TO THE CITY FOR APPROVAL.
15. ANY CHANGES CONTEMPLATED IN: DRAINAGE, ELEVATIONS OR STRUCTURES SHOWN ON THESE PLANS MUST BE REVIEWED BY THE CITY TO DETERMINE IF REVISED PLANS SHOULD BE SUBMITTED. NONCOMPLYING CONSTRUCTION MAY BE SUBJECT TO PENALTIES AND/OR REMOVAL. "AS-BUILT" PLANS MUST BE SUBMITTED PRIOR TO ANY RELEASE OF SECURITIES AND/OR ISSUANCE OF A CERTIFICATE OF USE.

CITY OF RANCHO MIRAGE		STANDARD DETAIL
REVISIONS	GENERAL NOTES (TO BE INCLUDED ON ALL IMPROVEMENT PLANS)	700
	APPROVED BY: CITY ENGINEER DATE	

CITY OF RANCHO MIRAGE

PAVING NOTES

1. ALL UNDERGROUND FACILITIES, INCLUDING LATERALS, SHALL BE IN PLACE, AND ALL TRENCHES COMPACTED AND TESTED PRIOR TO PAVING.
2. ALL EXISTING OR NEW IMPROVEMENTS, INCLUDING CURB AND GUTTERS, SIDEWALKS, ASPHALT CONCRETE OR P.C.C. PAVING, WHICH ARE BEING JOINED OR MATCHED IN CONNECTION WITH THIS PROJECT SHALL BE JOINED OR MATCHED IN A MANNER SATISFACTORY TO THE CITY ENGINEER, INCLUDING NECESSARY SAWCUTTING, REMOVAL, REPLACEMENT AND CAPPING.
3. NEW CURB AND GUTTER SHALL BE MARKED AT EVERY 10 FEET WITH A SCORE LINE AND EXPANSION JOINTS AS REQUIRED
4. NEW OR EXISTING CURB AND GUTTER SHALL BE JOINED, MATCHED, OR REPLACED IF DAMAGED, TO A SAWCUT LINE SUCH THAT A MINIMUM LENGTH OF 7 FEET OF CURB AND GUTTER REMAINS IN PLACE AT ALL LOCATIONS.
5. A "TACK COAT" SHALL BE APPLIED BETWEEN PAVEMENT LAYERS, CONCRETE SURFACES AND ON EXISTING PAVEMENT TO BE RESURFACED AT THE RATE OF 0.10 GAL/YD. THE TACK COAT SHALL BE TYPE SS1 ASPHALTIC EMULSION WITH A 60-70 GRADE LIQUID ASPHALT.
6. THE VISCOSITY GRADE OF PAVING ASPHALT SHALL BE PG 70-10 OR AS DETERMINED BY THE CITY ENGINEER AT THE TIME OF PAVING.
7. THE FINAL OR SURFACE LAYER OF ASPHALT CONCRETE SHALL NOT BE PLACED UNTIL ALL ON-SITE IMPROVEMENTS HAVE BEEN COMPLETED, INCLUDING ALL EARTHWORK GRADING.
8. MANHOLES AND VALVE BOX FRAMES SHALL BE ADJUSTED TO FINISHED GRADES AFTER COMPLETION OF CONSTRUCTION TO THE STANDARDS OF THE FACILITY OWNER.
9. ALL EXISTING PAVEMENT WITHIN AND ADJOINING THIS PROJECT SHALL BE EITHER REMOVED OR STRUCTURALLY TESTED TO VERIFY THAT THE STRUCTURAL CAPABILITIES ARE ACCEPTABLE. ALL RESULTS SHALL BE APPROVED BY THE CITY ENGINEER.
10. THE CURB SHALL BE "ETCHED" SHOWING LATERAL LOCATIONS: "S" FOR SEWER, "G" FOR GAS, AND "E" FOR ELECTRICAL.
11. ALL PERMANENT ROADWAY TRAFFIC STRIPING, LEGENDS AND PAVEMENT MARKERS SHALL BE INSTALLED AFTER PERMANENT PAVING. THE TYPE AND LOCATIONS SHALL BE INSTALLED PER PLAN OR AS DIRECTED BY THE CITY ENGINEER.
12. TEMPORARY ROADWAY STRIPING SHALL BE INSTALLED ON ALL UNFINISHED ROADWAY SURFACES AS DIRECTED BY THE CITY ENGINEER.
13. THE AGGREGATE BASE MATERIAL SPECIFIED IN THE PLANS SHALL BE COMPACTED TO A MINIMUM OF 95% RELATIVE COMPACTION WITHIN THE TOP FOOT OF THE MATERIAL UNDER PAVING. THE DEEPER SUBGRADE MUST BE COMPACTED TO AT LEAST 90% OF MAXIMUM RELATIVE DENSITY. TESTING WILL BE REQUIRED BY A SOIL ENGINEER.
14. JUST BEFORE PAVING, A SOIL STERILANT SHALL BE APPLIED TO THE COMPACTED BASE MATERIAL FOR ALL ASPHALT PAVING. SEE THE CITY'S STANDARD "SPECIAL PROVISIONS TO THE STANDARD SPECIFICATIONS" FOR THE SOIL STERILANT REQUIREMENTS.

CITY OF RANCHO MIRAGE		STANDARD DETAIL
REVISIONS	PAVING NOTES (TO BE INCLUDED ON ALL STREET OR PAVING PLANS)	701
06/08/2009	APPROVED BY: CITY ENGINEER DATE	

CITY OF RANCHO MIRAGE

GRADING NOTES

1. ALL WORK SHALL CONFORM TO CITY OF RANCHO MIRAGE GRADING ORDINANCE NO. 398, THE CITY ENGINEER, AND ANY SPECIAL PROVISIONS OF THE PERMIT.
2. GRADING SHALL BE IN ACCORDANCE WITH THE ENGINEERED GRADING REQUIREMENTS OF A SOILS REPORT PREPARED BY_____ NO. _____ DATED _____ TELEPHONE #_____
3. * THE CONTRACTOR SHALL NOTIFY THE CITY PUBLIC WORKS INSPECTION LINE (760-324-8271) 24 HOURS PRIOR TO ANY GRADING, BRUSHING OR CLEARING, EACH PHASE OF CONSTRUCTION, AND ANY OTHER WORK REQUIRING INSPECTION.
4. DURING ROUGH GRADING OPERATIONS AND PRIOR TO CONSTRUCTION OF PERMANENT DRAINAGE STRUCTURE, TEMPORARY DRAINAGE CONTROL SHALL BE PROVIDED TO PREVENT PONDING WATER, EROSION, AND DAMAGE TO ADJACENT PROPERTY.
5. THE CONTRACTOR SHALL BE RESPONSIBLE FOR PROVIDING AN EFFECTIVE MEANS OF DUST CONTROL WHICH SHALL INCLUDE PROVISIONS FOR ADEQUATE WATERING DURING THE GRADING PROCESS AND PROVISIONS FOR CONTINUANCE OF DUST CONTROL AFTER THE GRADING. DUST CONTROL SHALL CONTINUE UNTIL SUCH TIME THAT THE GRADED SURFACE PRESENTS SUFFICIENT PROTECTIVE COVER AGAINST WIND OR WATER EROSION AS DETERMINED BY THE CITY ENGINEER. SEE THE ATTACHED "LOCAL AIR QUALITY MANAGEMENT PLAN" FOR DETAILS OF EXPECTED DUST CONTROL METHODS.
6. AREAS OF FUTURE CONSTRUCTION AND ALL CUT AND FILL SLOPE FACES SHALL BE PLANTED WITH A CITY-APPROVED LANDSCAPE MATERIAL.
7. GRADING OPERATIONS AND MAINTENANCE OF EQUIPMENT WITHIN ONE HALF MILE OF HUMAN OCCUPANCY SHALL NOT BE CONDUCTED BETWEEN THE HOURS OF 5:00 P.M. AND 8:00 A.M., OR ANYTIME ON A SUNDAY OR FEDERAL HOLIDAY PER CITY CODE 15.04.020 (A).
8. PRIOR TO ANY GRADING OPERATIONS, ALL FILL AREAS SHALL BE CLEARED OF ORGANIC MATERIAL AND THE EXISTING GROUND SHALL BE SCARIFIED TO A MINIMUM DEPTH OF 12", OR AS RECOMMENDED BY THE SOILS REPORT.
9. MAXIMUM CUT AND FILL SLOPES SHALL BE NO STEEPER THAN 2 HORIZONTAL TO 1 VERTICAL.
10. ALL BUILDING PADS SHALL BE COMPACTED TO A MINIMUM OF 90% RELATIVE DENSITY IN ACCORDANCE WITH CITY ORDINANCE NO. 398 AND ABOVE MENTIONED SOILS REPORT.
11. ALL FILLS SHALL BE COMPACTED TO A MINIMUM OF 90% RELATIVE DENSITY IN ACCORDANCE WITH CITY ORDINANCE NO. 398. FIELD DENSITY SHALL BE DETERMINED IN ACCORDANCE WITH CITY GRADING ORDINANCE NO. 398.
12. MINIMUM BUILDING PAD AND DRAINAGE SLOPES=0.50% DRAINAGE SWALES SHALL BE A MINIMUM OF 0.5 FEET DEEP, 5 FEET WIDE, AND BE CONSTRUCTED A MINIMUM OF 2 FEET FROM THE TOP OF CUT OR FILL SLOPES. A 1-FOOT HIGH BERM SHALL BE PLACED AT THE TOP OF ALL SLOPES WHICH EXCEED 5:1 UNLESS PROTECTED WITH APPROVED EROSION CONTROL.
13. ALL TRAVELED WAYS MUST BE CLEANED DAILY OF ALL DIRT, MUD AND DEBRIS DEPOSITED ON THEM AS A RESULT OF THE GRADING OPERATION. CLEANING IS TO BE DONE TO THE SATISFACTION OF THE CITY ENGINEER.
14. BLOCK WALLS ARE NOT PART OF THE GRADING PERMIT. SUBMIT FOR SEPARATE BUILDING PERMIT.
15. THE SOILS ENGINEER, ENGINEERING GEOLOGIST AND DESIGN CIVIL ENGINEER SHALL, DURING GRADING, ENSURE COMPLIANCE WITH THE PLANS, SPECIFICATIONS AND CODES WITHIN THEIR PURVIEW.
16. PRIOR TO FINAL ACCEPTANCE OF GRADING, THE SOILS ENGINEER AND DESIGN ENGINEER SHALL SUBMIT (ON CITY FORMS) VERIFICATION THAT ALL WORK HAS CONFORMED TO THE GRADING PLAN, CITY STANDARDS AND THE RECOMMENDATIONS OF THE SOILS REPORT
17. ANY PUBLIC ROADWAY WHICH IS INTENDED TO BE USED TO CONDUCT ANY ASPECT OF THE GRADING FOR THE PROJECT SHALL BE COVERED BY A CITY ENCROACHMENT PERMIT AND SUBJECT TO PERMIT CONDITIONS.
18. THE CITY OF RANCHO MIRAGE IS IN A QUARANTINE AREA FOR THE THE RED IMPORTED FIRE ANT. PRIOR TO ANY MOVEMENT OF SOIL WITHIN THE SITE, OR FROM THE SITE, YOU MUST SCHEDULE AN INSPECTION AT 760-776-8208 WITH THE R.I.F.A. INSPECTOR AT LEAST 24 HOURS IN ADVANCE, AND SUBMIT CERTIFICATION OF CLEARANCE TO THE CITY.

CITY OF RANCHO MIRAGE		STANDARD DETAIL
REVISIONS	GRADING NOTES (TO BE INCLUDED ON ALL GRADING PLANS)	702
* 7/5/2012	APPROVED BY: CITY ENGINEER DATE	

Robert J. Mainiero, P.E.
CIVIL ENGINEERING & RELATED ASSISTANCE
P.O. BOX 2410
PALM SPRINGS, CA 92263
PHONE (760) 413-7127 FAX (760) 992-0702
psbob596@aol.com

REGISTERED PROFESSIONAL ENGINEER
ROBERT J. MAINIERO
C25658
Exp. 12-31-17
CIVIL
STATE OF CALIFORNIA

Narkweather ARCHITECTS INC.
73 330 HWY 111, SUITE A / PALM DESERT, CA 92260-4016
PHONE: (760) 346-4090 / E-MAIL: info@narkweather.net

OWNERSHIP OF DOCUMENTS
DRAWINGS AND SPECIFICATIONS AS INSTRUMENTS OF SERVICE ARE AND SHALL REMAIN THE PROPERTY OF THE DESIGNER WHETHER THE PROJECT FOR WHICH THEY WERE PREPARED IS EXECUTED OR NOT. THEY ARE NOT TO BE USED ON OTHER PROJECTS OR EXTENSIONS TO THIS PROJECT EXCEPT BY AGREEMENT IN WRITING AND WITH APPROPRIATE COMPENSATION TO Narkweather Architects Inc.
COPYRIGHT 2016 Narkweather Architects

CITY OF RANCHO MIRAGE
OBSERVATORY
PROJECT DESCRIPTION: Rancho Mirage Public Library
SITE ADDRESS: 71-100 Highway 111, Rancho Mirage, CA 92270

SHEET CONTENT
NOTES

DRAWING SCALE:
SCALE: NTS

ISSUE DATE		
MONTH	DAY	YEAR
SEPT.	29	2016

REVISION 1 DATE:
REVISION 2 DATE:
REVISION DATE:
REVISION DATE:
REVISION DATE:

(PLAN CHECK ENGINEER STAMP)
RECOMMENDED FOR APPROVAL BY: _____ DATE
R.C.E. 47159 EXP. 12/31/17
APPROVED BY CITY OF RANCHO MIRAGE:
WILLIAM A. ENOS, CITY ENGINEER
R.C.E. 45976, EXP. 6/30/2017 _____ DATE

DRAWING NUMBER
C5
SHEET # 15 OF 56
PRIVATE REFERENCE #
CITY REFERENCE #

Bid Set - 10/07/2016

NOTE: REFER TO CIVIL ENGINEERING DRAWINGS FOR PRECISE LOCATION AND ORIENTATION. SIDEWALKS AND ALL ACCESSIBLE ROUTES, DEVICES, AND ASSEMBLIES ARE SHOWN ON CIVIL DRAWINGS WITH TOPOGRAPHIC INFORMATION AND FINISH GRADES.

VERIFY EXISTING CONDITIONS BEFORE STARTING WORK. CONSULT ARCHITECT FOR ANY DISSIMILARITIES DISCOVERED.

EXISTING FOUNTAIN (SEE CIVIL) BETWEEN THE PROPOSED NEW FACILITY AND THE LIBRARY BUILDING, SHALL BE ABANDONED (WATER-LINE DISCONNECTED). HOOK UP EXISTING 3/4" DIAMETER COLD WATER LINE TO SERVICE THE NEW BUILDING PLUMBING FIXTURES.

PROTECT ALL EXISTING CONDITIONS FROM DAMAGE.
ALL WORK SHALL BE EXECUTED IN AN ORDERLY AND CAREFUL MANNER WITH DUE CONSIDERATION FOR PUBLIC SAFETY AND IN CONFORMITY WITH LOCAL SAFETY AND CAL-OSHA STANDARDS.

THE GENERAL CONTRACTOR SHALL VERIFY ALL EXISTING UNDERGROUND SERVICES THAT INTERFERE WITH PROPOSED WORK. UNDERGROUND SERVICES SHALL NOT BE REMOVED OR OTHERWISE DISTURBED WITHOUT PERMISSION FROM THE PROPERTY OWNER (U.O.N. ON DRAWINGS).

NOTE: THE COLOR SPECIFICATIONS FOR ALL SIGN POSTS, LIGHTING POLES, AND OTHER MISC. MOUNTS TO BE TIGER DRYLAC RAL – EXTERIOR POWDER COATING (#RAL8007), AKA – "RANCHO MIRAGE BROWN".

REFER TO CIVIL DRAWINGS, PLANS, AND DETAILS FOR SITE ACCESS TO THE PRIMARY BUILDING ENTRANCES, EXTERIOR GROUND FLOOR EXITS, AND ACCESS TO NORMAL PATHS OF TRAVEL ON THE SITE TO PROVIDE FOR PERSONS WITH DISABILITIES. ACCESSIBLE ROUTES SHALL INCORPORATE (BUT NOT LIMITED TO) EXTERIOR STAIRS, LANDINGS, WALKS AND SIDEWALKS, PEDESTRIAN RAMPS, CURB RAMPS, WARNING CURBS, DETECTABLE WARNINGS, SIGNAGE, GATES, LIFTS, AND WALKING SURFACE MATERIAL. THE ROUTE MUST BE THE MOST PRACTICAL DIRECT ROUTE BETWEEN ACCESSIBLE BUILDING ENTRANCES, SITE FACILITIES, ACCESSIBLE PARKING, PUBLIC SIDEWALKS, AND THE ACCESSIBLE ENTRANCES TO THE SITE. CIVIL DRAWINGS SHOW DETAILED AND DIMENSIONED SITE PLAN DETAILS INCORPORATING COMPONENTS TO DEMONSTRATE COMPLIANCE WITH DISABLED ACCESS FOR THE SITE INCLUDING ACCESSIBLE PARKING AREAS, SIDEWALKS, CURBS AND CURB RAMPS, EXTERIOR LANDINGS, AND INTERIOR FLOOR ELEVATIONS.

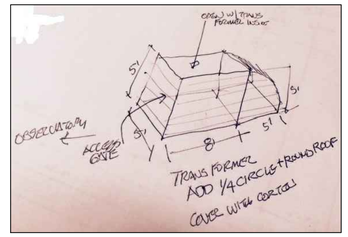

TRANSFORMER ENCLOSURE SKETCH B/A1

CONTRACTOR'S MUST NOT TRESPASS ON ADJACENT PROPERTY.
INSTALL TEMPORARY EROSION BARRIER ALONG LINE.
NO EQUIPMENT OR STOCK PILING ALLOWED.

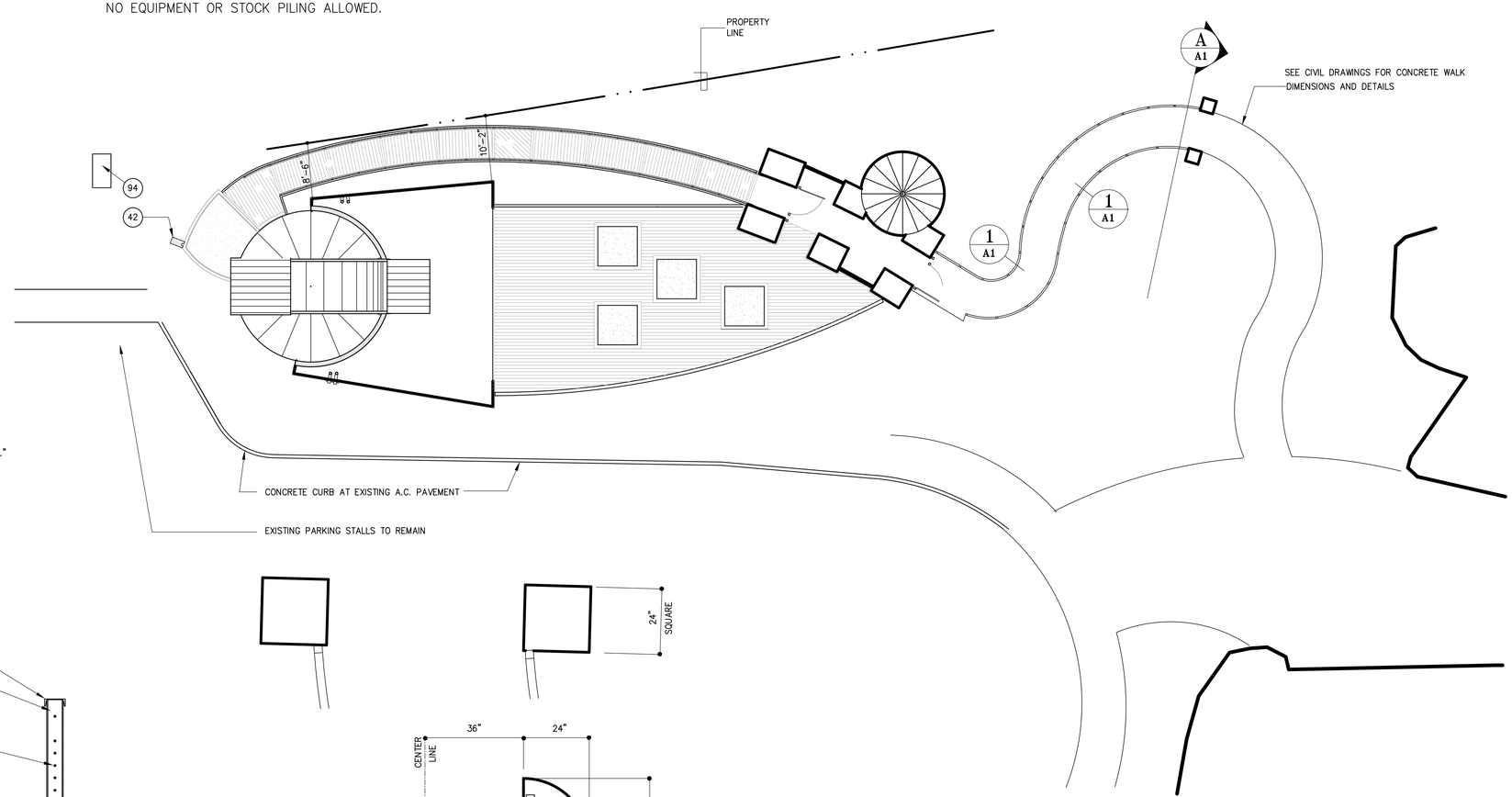

SIGNS SHALL BE POSTED AT EACH ENTRANCE TO OFF-STREET PARKING FACILITIES. THE SIGN SHALL NOT BE LESS THAN 17" X 22" IN SIZE WITH 1 INCH HIGH LETTERING WHICH STATES THE FOLLOWING:
"UNAUTHORIZED VEHICLES PARKED IN DESIGNATED ACCESSIBLE SPACES NOT DISPLAYING DISTINGUISHING PLACARDS OR SPECIAL LICENSE PLATES ISSUED FOR PERSONS WITH DISABILITIES WILL BE TOWED AWAY AT THE OWNER'S EXPENSE. TOWED VEHICLES MAY BE RECLAIMED AT --- OR BY PHONING ---."
CONTACT CITY FOR SPECIFIC INFORMATION AND COORDINATION.

VERIFY INFORMATION FROM CITY

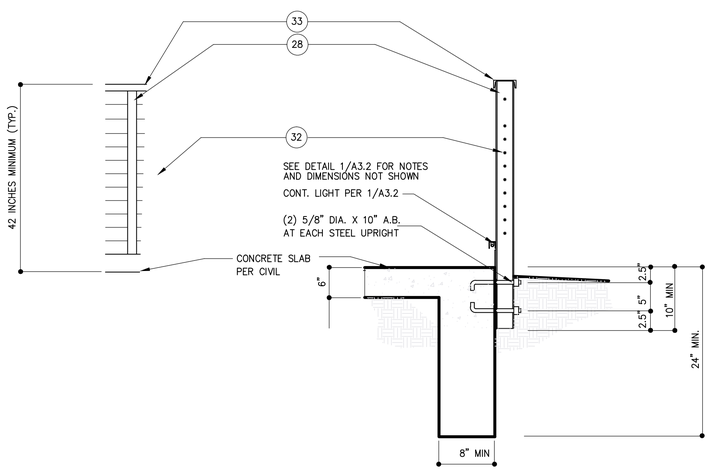

RAILING DETAIL ALONG WALKWAY

1/A1

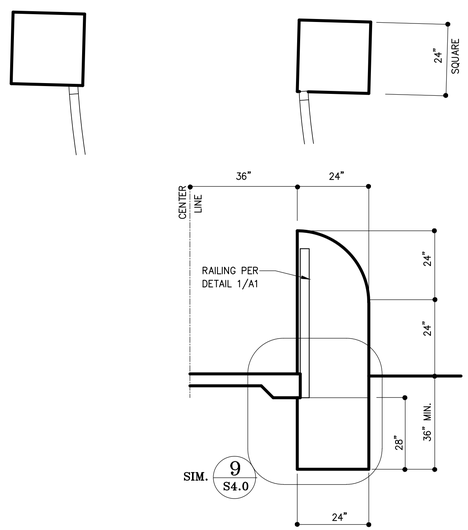

CONCRETE BOLLARD SECTION

A/A1

Narkweather ARCHITECTS INC.
73 330 HWY 111, SUITE A / PALM DESERT, CA 92260-4016
PHONE: (760) 346-4090 / E-MAIL: info@narkweather.net

OWNERSHIP OF DOCUMENTS
DRAWINGS AND SPECIFICATIONS AS INSTRUMENTS OF SERVICE ARE AND SHALL REMAIN THE PROPERTY OF THE DESIGNER WHETHER THE PROJECT FOR WHICH THEY WERE PREPARED IS EXECUTED OR NOT. THEY ARE NOT TO BE USED ON OTHER PROJECTS OR EXTENSIONS TO THIS PROJECT EXCEPT BY AGREEMENT IN WRITING AND WITH APPROPRIATE COMPENSATION TO Narkweather Architects Inc.
COPYRIGHT 2016 Narkweather Architects

CITY OF RANCHO MIRAGE

PROJECT DESCRIPTION: OBSERVATORY
Rancho Mirage Public Library

SITE ADDRESS: 71-100 California 111, Rancho Mirage, CA 92270

SHEET CONTENT
SITE MAP

DRAWING SCALE:
SCALE: 1" = 10.0'

ISSUE DATE		
MONTH	DAY	YEAR
SEPT.	29	2016

1	REVISION DATE:
2	REVISION DATE:
	REVISION DATE:
	REVISION DATE:
	REVISION DATE:

(I AM OVER ENGINEER STAMP)
RECOMMENDED FOR APPROVAL BY:
LELAND E. COLE
R.C.E. 47159 EXP. 12/31/17
DATE 9/27/16

APPROVED BY CITY OF RANCHO MIRAGE:
WILLIAM A. DAVIS, CITY ENGINEER
R.C.E. 43910, EXP. 6/30/2017
DATE

DRAWING NUMBER
A1
SHEET # 16 OF 56
PRIVATE REFERENCE #
CITY REFERENCE #

Bid Set - 10/07/2016

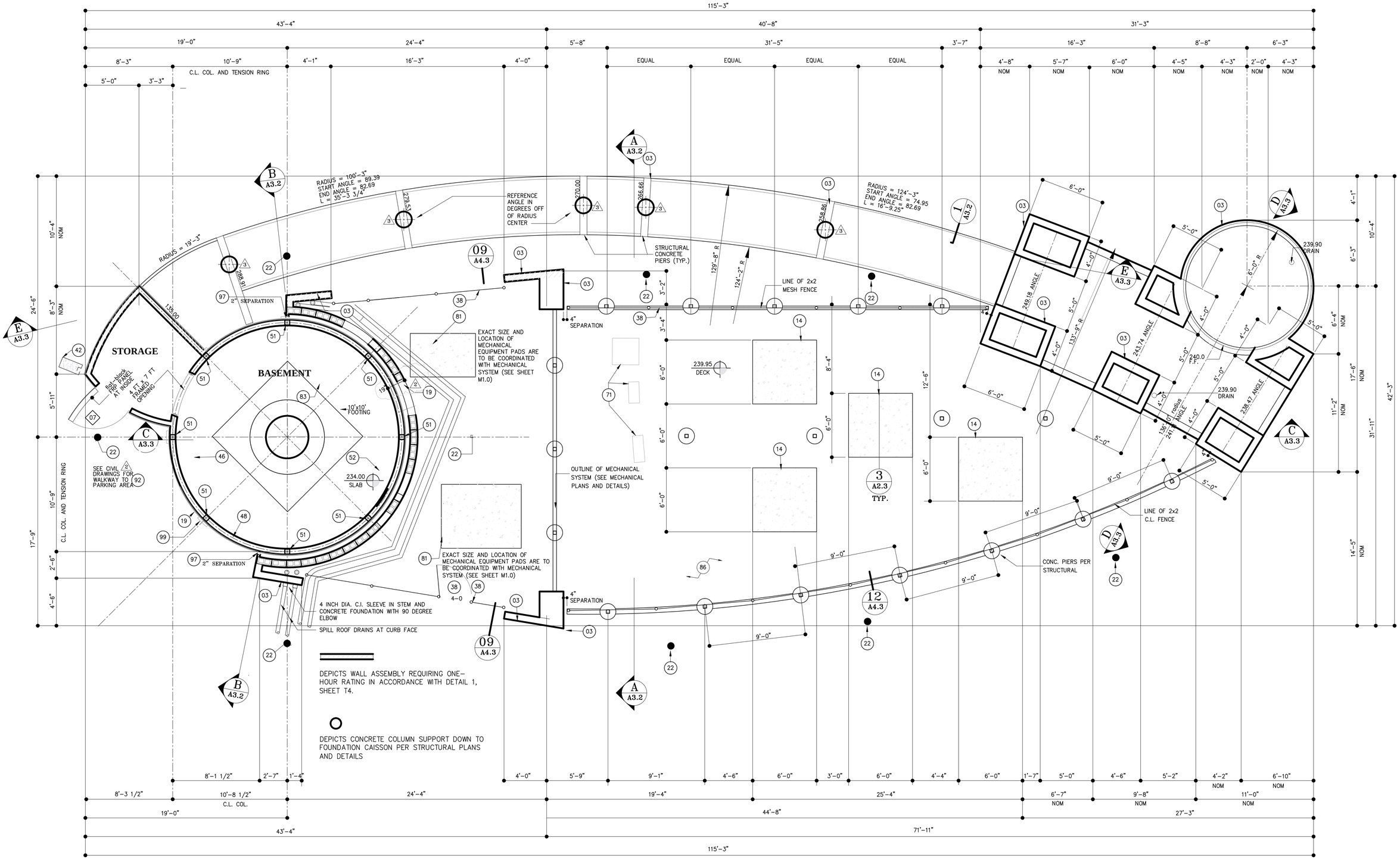

BASEMENT PLAN

SCALE: 1/4" = 1'-0"

SEE SHEET T3 FOR PROJECT KEY NOTES

NORTH

Narkweather ARCHITECTS INC.
73 330 HWY 111, SUITE A / PALM DESERT, CA 92260-4016
PHONE: (760) 346-4090 / E-MAIL: info@narkweather.net

OWNERSHIP OF DOCUMENTS
DRAWINGS AND SPECIFICATIONS AS INSTRUMENTS OF SERVICE ARE AND SHALL REMAIN THE PROPERTY OF THE DESIGNER WHETHER THE PROJECT FOR WHICH THEY WERE PREPARED IS EXECUTED OR NOT. THEY ARE NOT TO BE USED ON OTHER PROJECTS OR EXTENSIONS TO THIS PROJECT EXCEPT BY AGREEMENT IN WRITING AND WITH APPROPRIATE COMPENSATION TO Narkweather Architects Inc.
COPYRIGHT 2016 Narkweather Architects

CITY OF RANCHO MIRAGE

PROJECT DESCRIPTION: OBSERVATORY
Rancho Mirage Public Library
SITE ADDRESS: 71-100 California 111, Rancho Mirage, CA 92270

SHEET CONTENT

BASEMENT PLAN

DRAWING SCALE:
SCALE: 1/4" = 1'-0"

ISSUE DATE		
MONTH	DAY	YEAR
SEPT.	29	2016

1	REVISION DATE:
2	REVISION DATE:
3	REVISION DATE:
	REVISION DATE:
	REVISION DATE:

(PLAN CHECK ENGINEER STAMP)
RECOMMENDED FOR APPROVAL BY:
LELAND E. COLE
R.C.E. 47159 EXP. 12/31/17
9/27/16 DATE
APPROVED BY CITY OF RANCHO MIRAGE:
WILLIAM A. ENOS, CITY ENGINEER
R.C.E. 43910, EXP. 6/30/2017
DATE

DRAWING NUMBER
A2.1
SHEET # 17 OF 56
PRIVATE REFERENCE #
CITY REFERENCE #

Bid Set - 10/07/2016

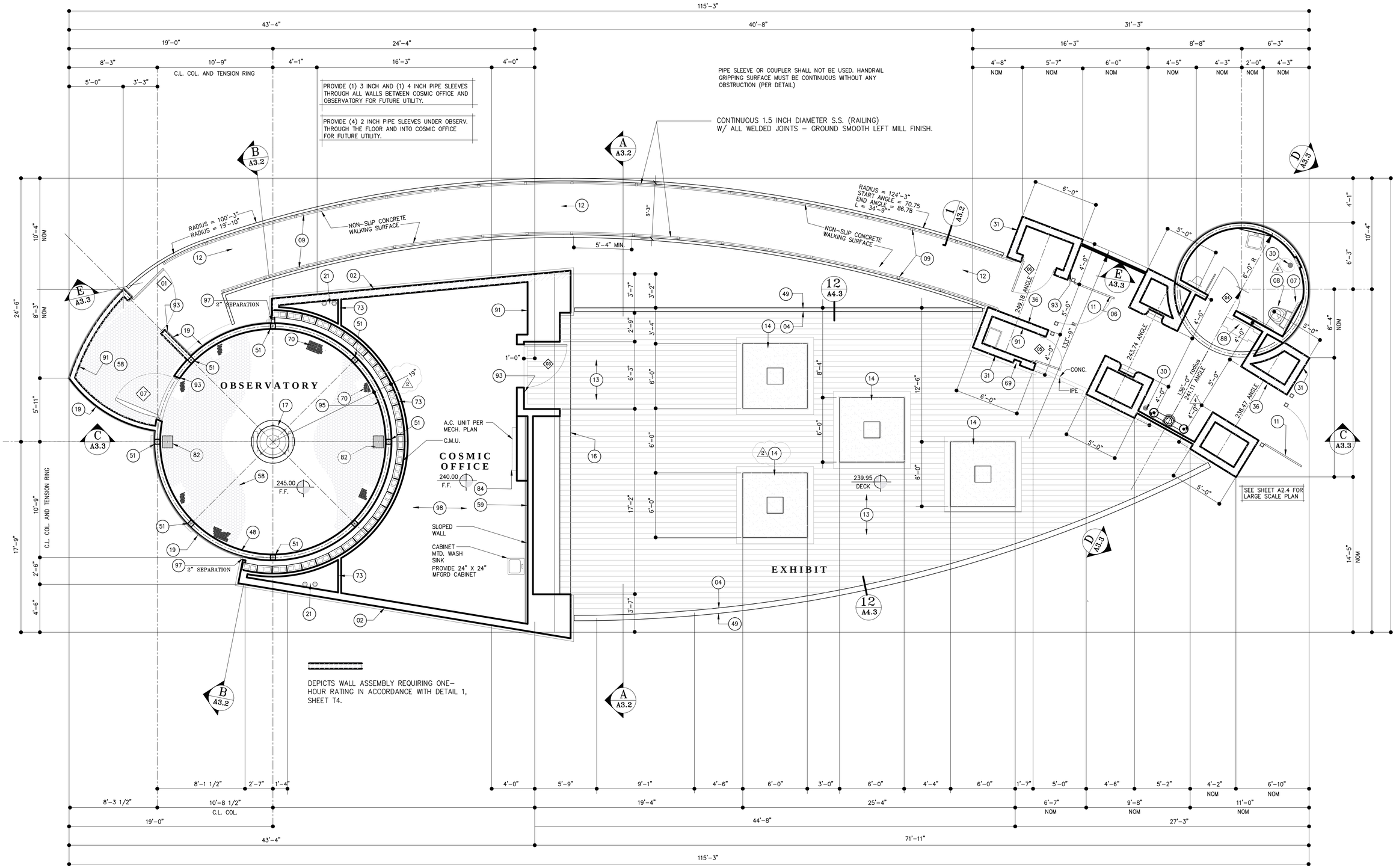

FLOOR PLAN

SCALE: 1/4" = 1'-0"

SEE SHEET T3 FOR PROJECT KEY NOTES

NORTH

Narkweather ARCHITECTS INC.
73 330 HWY 111, SUITE A / PALM DESERT, CA 92260-4016
PHONE: (760) 346-4090 / E-MAIL: info@narkweather.net

OWNERSHIP OF DOCUMENTS
DRAWINGS AND SPECIFICATIONS AS INSTRUMENTS OF SERVICE ARE AND SHALL REMAIN THE PROPERTY OF THE DESIGNER WHETHER THE PROJECT FOR WHICH THEY WERE PREPARED IS EXECUTED OR NOT. THEY ARE NOT TO BE USED ON OTHER PROJECTS OR EXTENSIONS TO THIS PROJECT EXCEPT BY AGREEMENT IN WRITING AND WITH APPROPRIATE COMPENSATION TO Narkweather Architects Inc.
COPYRIGHT 2016 Narkweather Architects

CITY OF RANCHO MIRAGE

PROJECT DESCRIPTION: OBSERVATORY
Rancho Mirage Public Library
SITE ADDRESS: 71-100 California 111, Rancho Mirage, CA 92270

SHEET CONTENT

FLOOR PLAN

DRAWING SCALE:
SCALE: 1/4" = 1'-0"

ISSUE DATE		
MONTH	DAY	YEAR
SEPT	29	2016

1 REVISION DATE:
2 REVISION DATE:
3 REVISION DATE:
4 REVISION DATE:
△ REVISION DATE:

(PLAN CHECK ENGINEER STAMP)
RECOMMENDED FOR APPROVAL BY: LELAND E. COLE 9/27/16 DATE
R.C.E. 47159 EXP. 12/31/17
APPROVED BY CITY OF RANCHO MIRAGE: WILLIAM A. ENOS, CITY ENGINEER R.C.E. 43910, EXP. 6/30/2017 DATE

DRAWING NUMBER
A2.2
SHEET # 18 OF 56
PRIVATE REFERENCE #
CITY REFERENCE #

Bid Set - 10/07/2016

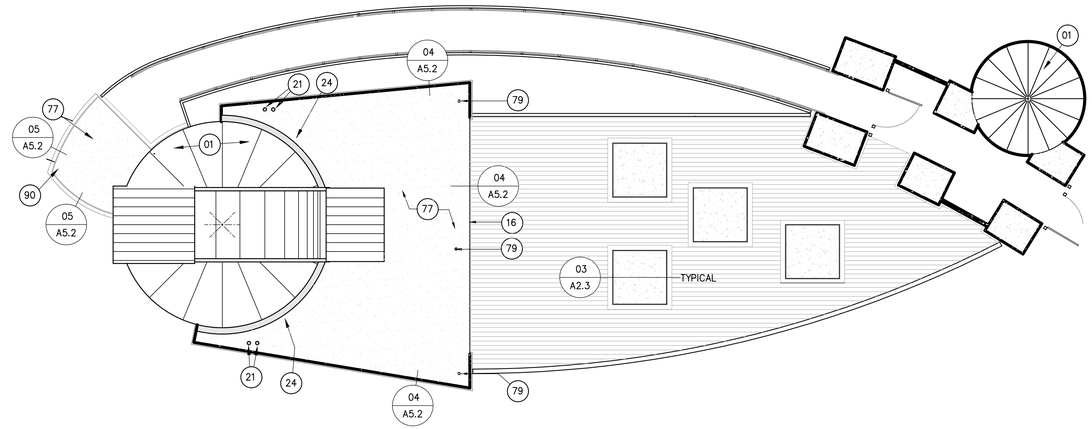

SEE SHEET A5.2 FOR ROOF DRAIN AND ROOFING ASSEMBLY COMPLIANCE INSTALLATION
ROOFING CONTRACTOR MUST COMPLETE AND SUBMIT PROPER CEC COOL-ROOF CERTIFICATION FORMS FOR REVIEW AND APPROVAL BY LOCAL AUTHORITY PRIOR TO INSTALLATION.

ROOF PLAN

SCALE: 1/8" = 1'-0"

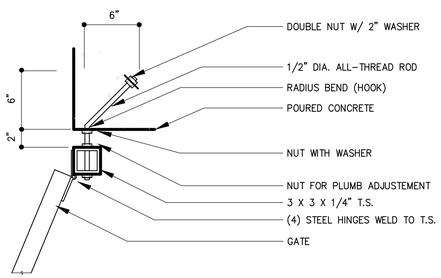

GATE HINGE PLAN

NOT TO SCALE

2

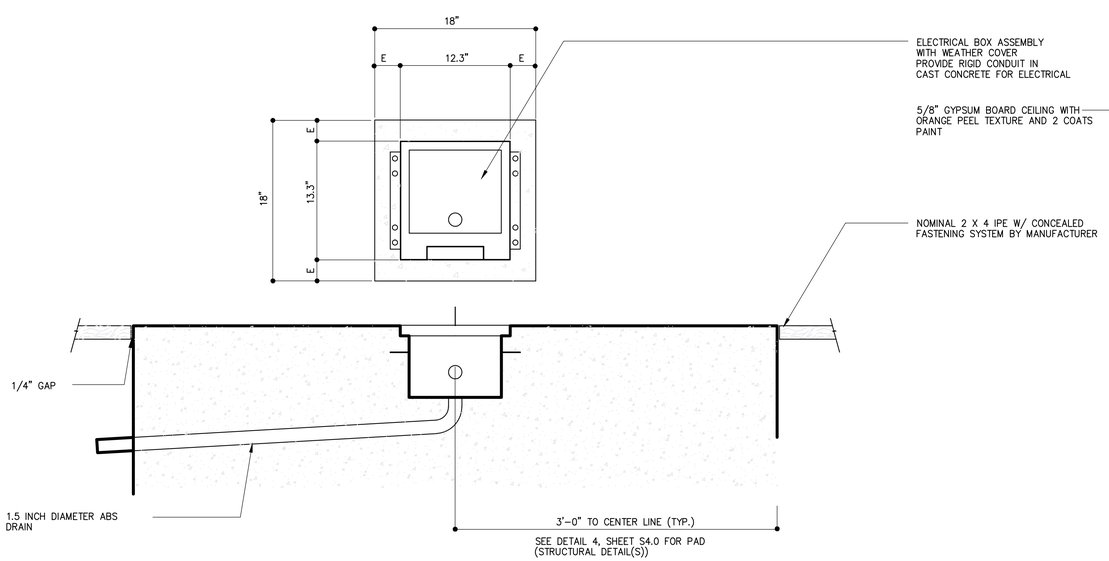

PEDESTAL SECTION

NOT TO SCALE

3

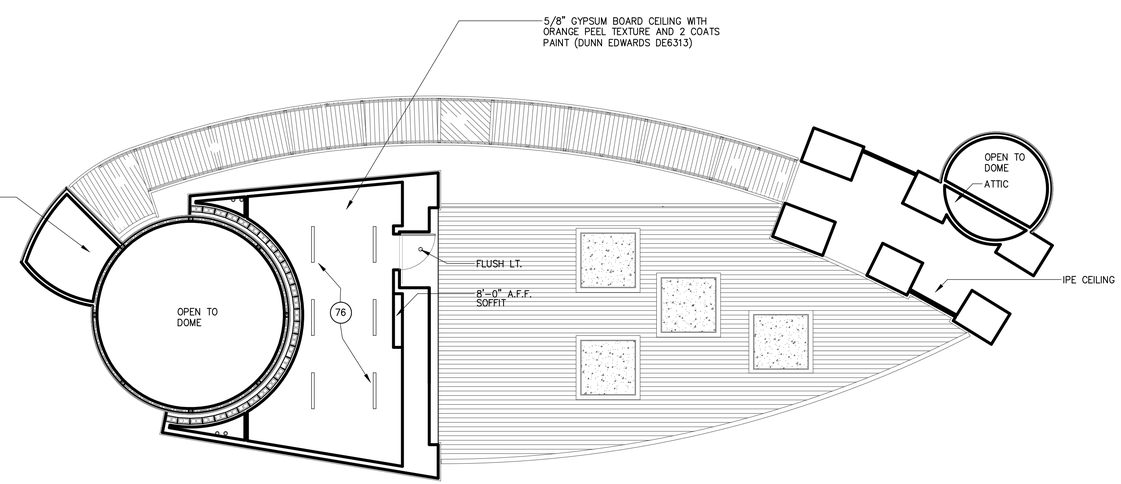

SEE SHEET T3 FOR PROJECT KEY NOTES

NORTH

REFLECTED CEILING PLAN

SCALE: 1/8" = 1'-0"

Narkweather ARCHITECTS INC.
73 330 HWY 111, SUITE A / PALM DESERT, CA 92260-4016
PHONE: (760) 346-4000 / E-MAIL: info@narkweather.net

OWNERSHIP OF DOCUMENTS
DRAWINGS AND SPECIFICATIONS AS INSTRUMENTS OF SERVICE ARE AND SHALL REMAIN THE PROPERTY OF THE DESIGNER WHETHER THE PROJECT FOR WHICH THEY WERE PREPARED IS EXECUTED OR NOT. THEY ARE NOT TO BE USED ON OTHER PROJECTS OR EXTENSIONS TO THIS PROJECT EXCEPT BY AGREEMENT IN WRITING AND WITH APPROPRIATE COMPENSATION TO Narkweather Architects Inc.
COPYRIGHT 2016 Narkweather Architects

CITY OF RANCHO MIRAGE

PROJECT DESCRIPTION: OBSERVATORY
Rancho Mirage Public Library
SITE ADDRESS: 71-100 California 111, Rancho Mirage, CA 92270

SHEET CONTENT
ROOF PLAN RCP & DTLS

DRAWING SCALE:
SCALE: 1/8" = 1'-0"

ISSUE DATE		
MONTH	DAY	YEAR
SEPT.	29	2016

1	REVISION DATE:
	REVISION DATE:
	REVISION DATE:
	REVISION DATE:
	REVISION DATE:

(FOR CITY ENGINEER STAMP)
RECOMMENDED FOR APPROVAL BY:
LELAND E. COLE 9/27/16
R.E.C. 47150 EXP. 12/31/17 DATE
APPROVED BY CITY OF RANCHO MIRAGE:
DATE
WILLIAM A. DONG, CITY ENGINEER
R.C.E. 43191 EXP. 12/31/2017

DRAWING NUMBER
A2.3
SHEET # 19 OF 56
PRIVATE REFERENCE #
CITY REFERENCE #

Bid Set - 10/07/2016

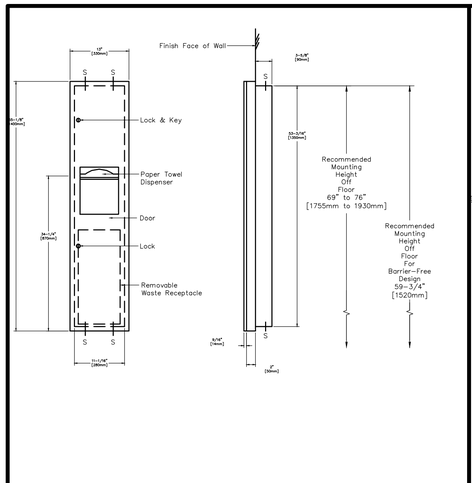

PAPER TOWEL DISPENSER (A)

CATALOG NUMBER B-38032

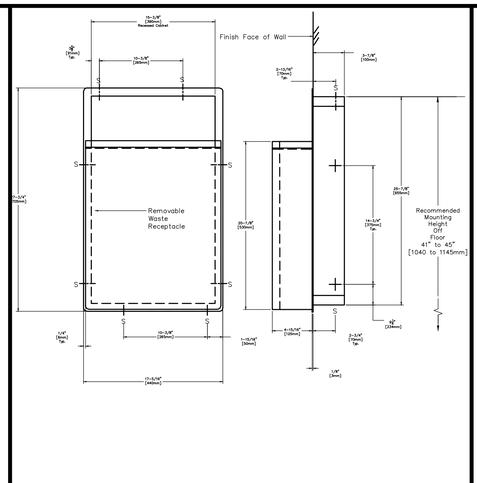

WASTE RECEPTACLE (B)

CATALOG NUMBER B-43644

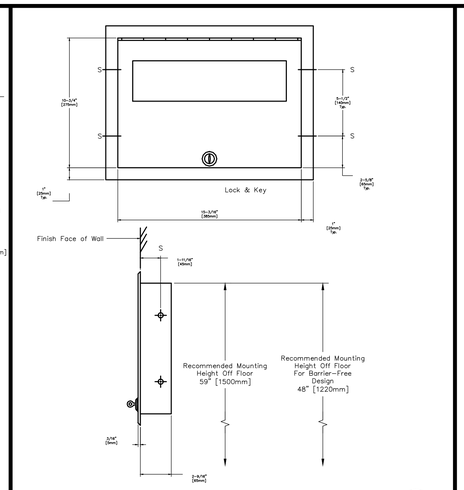

SEAT – COVER DISPENSER (C)

CATALOG NUMBER B-301

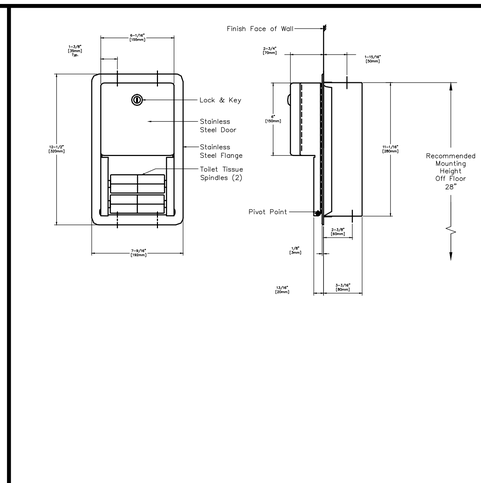

TOILET TISSUE DISPENSER (D)

CATALOG NUMBER B-3888

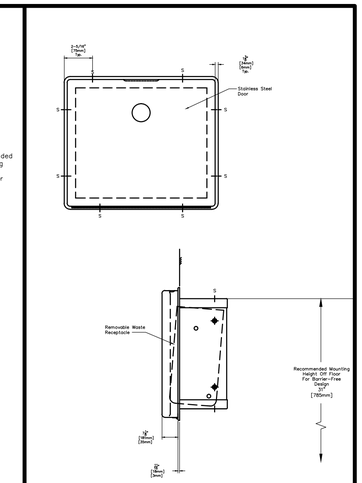

SANITARY NAPKIN DISP. (E)

CATALOG NUMBER B-4353

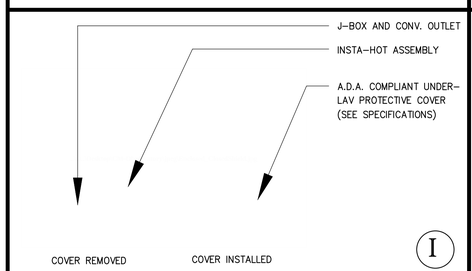

(I)

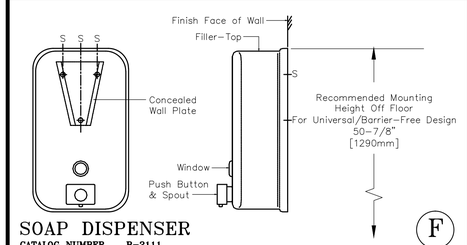

SOAP DISPENSER (F)

CATALOG NUMBER B-2111

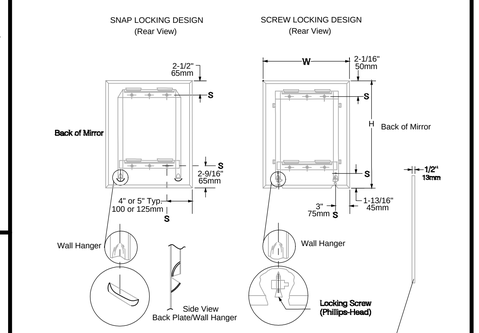

MIRROR ASSEMBLY (G)

CATALOG NUMBER B-165

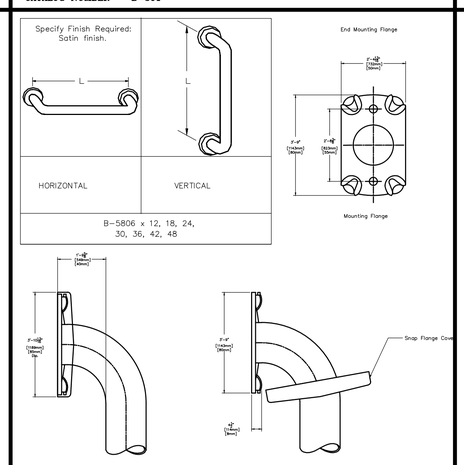

GRAB BARS (H)

CATALOG NUMBER B-5806

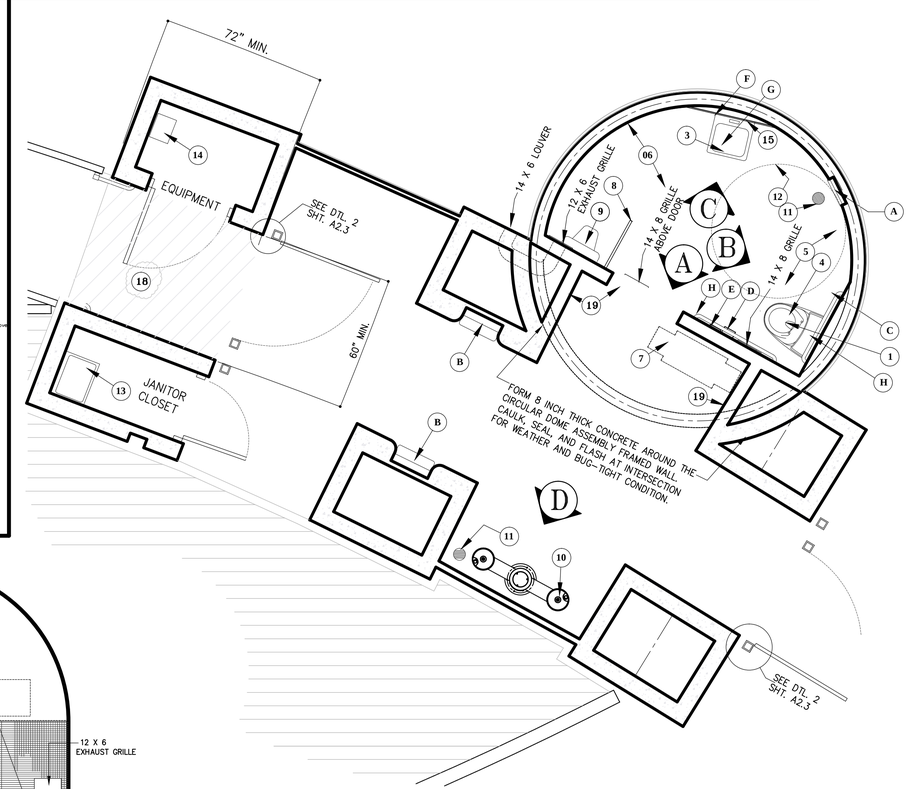

#	DESCRIPTION	MANUFACTURER	DET. #
A	PAPER TOWEL DISPENSER	BOBRICK	B-38032
B	WASTE RECEPTACLE	BOBRICK	B-43644
C	TOILET SEAT COVER	BOBRICK	B-301
D	TOILET TISSUE DISPENSER	BOBRICK	B-3888
E	SANITARY NAPKIN DISPOSAL	BOBRICK	B-4353
F	SOAP DISPENSER	BOBRICK	B-2111
G	MIRROR	BOBRICK	B-165
H	GRAB BAR	BOBRICK	B-5806-36 B-5806-42 B-5806-18
I	UNDER LAV PROTECTION	TRUEBRO	2018 AS

1. AMERICAN STANDARD 1.1 GPF AFWALL MILLENIUM SYSTEM W/ MANUAL FLUSH VALVE OPEN FRONT ELONGATED SEAT WITH COVER WHITE–
2. NOTE: FLUSH CONTROL SHALL BE HAND OPERATED OR AUTOMATIC, OPERABLE W/ ONE HAND NOT REQUIRING TIGHT GRASPING, PINCHING, OR TWISTING OF THE WRIST. THE FORCE = 5 # MAX. MOUNT ON WIDE SIDE OF TOILET AT 44" MAX. A.F.F.
3. AMERICAN STD. #0356.041 WALL HUNG WHEELCHAIR LAV. 20" X 18" #2385.457 DRAIN\FAUCET ASSEMBLY PROVIDE METAL WALL CARRIER
4. WALLS W/IN 2 FEET OF THE FRONT AND SIDES OF WATER CLOSET SHALL HAVE A SMOOTH, HARD NONABSORBANT SURFACE ON ALL WALL WAINSCOTS TO THE SPECIFIED HEIGHT ABOVE FINISHED FLOOR. PROVIDE A TILED SHELF AND FURRED OUT STRAIGHT WALLS BACK TO CURVED WALL.
5. TOILET ROOM FLOOR SHALL BE A NON-SLIP 2x2 CERAMIC FLOOR TILE. EXTENDING UP ON ALL WALLS AND UP ON FURRED OUT AREAS AND WALLS ADJACENT TO FIXTURES AS SHOWN ON ELEVATIONS.
6. TOILET ROOM FLOOR AND ALL WALLS UP TO DOME TO BE NOMINAL 2 X 2 CERAMIC TILE (SEE SPECIFICATIONS)
7. MECHANICAL UNIT MOUNTED IN ATTIC ABOVE CEILING PER MECH. PLANS
8. WALL HUNG MANUFACTURED URINAL SCREEN (SUBMIT SHOP DRAWINGS)
9. URINAL
10. WATER COOLER (ELKAY TRI-LEVEL MODEL NUMBER EZH20LK4420BF1UDB)
11. FLOOR DRAIN
12. 60 INCH DIAMETER WHEELCHAIR TURNAROUND CLEARANCE
13. MOP SINK (ELKAY 16 X 20 X 6 – FLR-1X)
14. FIRE ALARM AND RISER (DEFERRED SUBMITTAL)
15. CHRONOMITE INSTANT-FLOW WATER HEATER. RUN WATER PIPES INSIDE REMOVABLE PANEL UNDER LAVATORY.
16. 22" X 30" ACCESS PANEL TO ATTIC PER DETAIL #2, SHEET G3. (G.B. VENEERED)
17. OMIT
18. BOTTOM LANDING SERVING THE EXIT RAMP SHALL HAVE A DIMENSION IN THE DIRECTION OF RAMP RUN OF 72" AND A CLEAR WIDTH OF 60".
19. METAL STUD FRAMED WALLS AND SOFFIT WITH 1/2" CDX PLY OR OSB BACKING FOR GALVALUME SHEET METAL O/ 30 POUND FELT. PROVIDE CHANNEL SCREED CONTROL JOINT AT JUNCTURE WITH CONCRETE

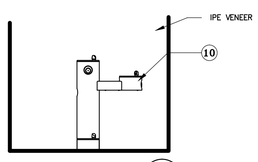

(D)

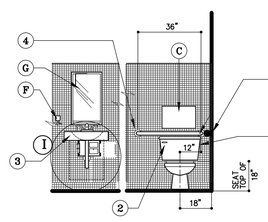

(C) (B)

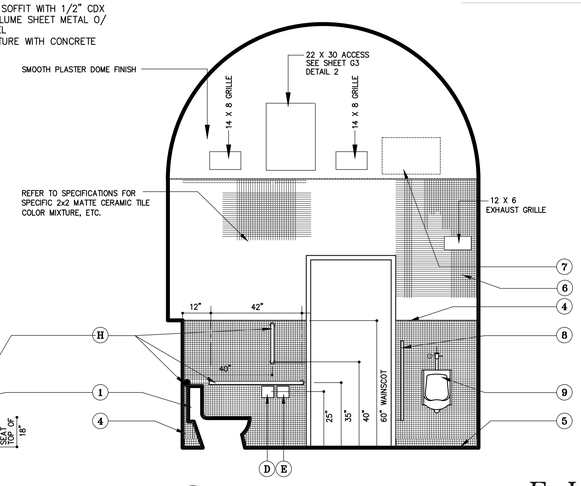

(A)

FLOOR PLAN (PARTIAL)

SCALE: 3/8" = 1'-0"

Narkweather ARCHITECTS INC.
73 330 HWY 111, SUITE A / PALM DESERT, CA 92260-4016
PHONE: (760) 346-4090 / E-MAIL: info@narkweather.net

OWNERSHIP OF DOCUMENTS
DRAWINGS AND SPECIFICATIONS AS INSTRUMENTS OF SERVICE ARE AND SHALL REMAIN THE PROPERTY OF THE DESIGNER WHETHER THE PROJECT FOR WHICH THEY WERE PREPARED IS EXECUTED OR NOT. THEY ARE NOT TO BE USED ON OTHER PROJECTS OR EXTENSIONS TO THIS PROJECT EXCEPT BY AGREEMENT IN WRITING AND WITH APPROPRIATE COMPENSATION TO Narkweather Architects Inc.
COPYRIGHT 2016 Narkweather Architects

CITY OF RANCHO MIRAGE
OBSERVATORY
PROJECT DESCRIPTION: Rancho Mirage Public Library
SITE ADDRESS: 71-100 California 111, Rancho Mirage, CA 92270

SHEET CONTENT
interior DETAILS

DRAWING SCALE:
SCALE: 3/8" = 1'-0"

ISSUE DATE		
MONTH	DAY	YEAR
SEPT.	29	2016

1	REVISION DATE:
2	REVISION DATE:
	REVISION DATE:
	REVISION DATE:
	REVISION DATE:

(FOR CITY DONOR STAMP)
RECOMMENDED FOR APPROVAL BY: LELAND E. COLE — 9/27/16 DATE
R.C.E. 47159 EXP. 12/31/17
APPROVED BY CITY OF RANCHO MIRAGE: DATE
WILLIAM A. ENOS, CITY ENGINEER
R.C.E. 43765 EXP. 06/30/17

DRAWING NUMBER
A2.4
SHEET # 20 OF 56
PRIVATE REFERENCE #
CITY REFERENCE #

Bid Set - 10/07/2016

DOOR SCHEDULE

VERIFY EXACT LOCATION OF HARDWARE AND SIGNAGE BASED ON DOOR SWING CONFIGURATION.

DOOR SYM	DOOR WIDTH	DOOR HEIGHT	DOOR THK.	DOOR MATERIAL	DOOR FINISH (GALV. = GALVALUME)	DOOR CORE	DOOR TYPE	FRAME MATERIAL	FRAME FINISH (GALV. = GALVALUME)	REMARKS	HARDWARE: BUTT HINGES	HANDLE / EXIT DEVICE(S)	LOCKSET	PUSH-PULL PLATE	PANIC HARDWARE	CLOSURE	KICK PROTECTION PLATE	STOPS	THRESHOLD	GASKET SET	DOOR BOTTOM	VIEWER (PEEP HOLE)	DOOR GUARD W/ EDGE	PRIVACY LOCK	ROLLER BUMP	RAIN GUARD
7	4'-0"	7'-0"			FLAT BLACK INTERIOR SIDE		D	SUBMIT SHOP DRAWINGS TO INCLUDE ALL CUSTOM HARDWARE ASSEMBLIES AND DOOR CONSTRUCTION FOR REVIEW.																		
1	4'-0"	7'-0"	1 3/4"	16 GA. METAL	GALV.	2# DENSITY THERMA FIBER INS.	E	16 GA. METAL	GALV. FLAT BLACK INTERIOR SIDE		A1	B4	B3					D2	G2	F1	F4	C1				F3
#2 is now #7																										
3	4'-0"	7'-0"	1 3/4"	16 GA. METAL	GALV.	2# DENSITY THERMA FIBER INS.	A	16 GA. METAL	GALV. FLAT BLACK INTERIOR SIDE	MANUFACTURER'S STANDARD RESILIENT TYPE SILENCERS	A2	B6	B3					D1	G2	F2	F4					
4	3'-0"	7'-0"	1 3/4"	16 GA. METAL	GALV.	2# DENSITY THERMA FIBER INS.	B	16 GA. METAL	GALV.	THUMB TURN INSIDE / KEY DEADBOLT AND LOCKSET ALIKE	A2	B4	B5			E1		D1	G1	F2	F4			X		
5	2'-4"	7'-0"	1 3/4"	16 GA. METAL	GALV.	2# DENSITY THERMA FIBER INS.	C	16 GA. METAL	GALV.		A2	B4	B3					D1		F2	F4					
6	3'-0"	7'-0"	1 3/4"	16 GA. METAL	GALV.	2# DENSITY THERMA FIBER INS.	C	16 GA. METAL	GALV.		A2	B4	B3					D1		F2	F4					

REMARKS:

DOORS TO BE FINISHED ON DOTH SIDES BEFORE HANGING

ADEQUATELY CAULK / SEAL AROUND EXTERIOR OPENINGS

STORE FLAT ON LEVEL SURFACE IN DRY VENTILATED SPACE

DOORS ARE NOT TO BE SUBJECTED TO EXTREME OR RAPID CHANGES IN TEMPERATURE BEFORE INSTALLATION

NOTICE: DOOR NUMBER 7 IS CUSTOM MADE AND OCCURS AT 2 LOCATIONS (EXT. AND INT.); OUTSIDE RADIUS MATCHES WALL CURVE. INSIDE CAN BE FLAT (PAINTED)

KEY NOTES

#	QUANT.	DESCRIPTION	MFGRS. #	MANUFACTURER
A1	4	BUTT HINGES	BB1279B4.5x4.5 26D	HAGER
A2	3	BUTT HINGES	1129 4.5x4.5 26D	HAGER
A3	3	SPRING HINGES	1250 4.5x4.5 26D	HAGER
B1	1	LOCKING DEVICE	GT115PHIL2.75ASA26D	P.D.Q.
B2	1	PRIVACY LOCK	GP176PHL2.75 US26D	P.D.Q.
B3	1	DEADBOLT LOCK	AL80S-626	SCHLAGE
B4	1	LEVER	A80PD-LEVER-626	SCHLAGE
B5	1	LEVER	A40S-LEVER-626	SCHLAGE
B6	1	LEVER	LEVER HANDLE	SCHLAGE
C1	1	PANIC HARDWARE	APEX 2000 SERIES	STANLEY
D1	1	WALL STOP	236W US32D	HAGGER
D2	1	OVERHEAD STOP	910S26D	DORMA ARCH
E1	1	DOOR CLOSURE	7414 689/AL	DORMA ARCH
F1	1	PERIMETER GASKET	5773D (1)48"(2)84"	PEMKO
F2	1	WEATHERSTRIP	S88D-17'	PEMKO
F3	1	RAIN DRIP	346C-48"	PEMKO
F4	1	DOOR SWEEP	315CN-48"	PEMKO
G1	1	VINYL THRESHOLD	ADJ232V14BL-48"	PEMKO
G2	1	THRESHOLD	271A 48" WSLS	PEMKO

GENERAL DOOR AND HARDWARE NOTES

1. EXIT DOORS SHALL SWING IN THE DIRECTION OF EXIT TRAVEL WHEN SERVING ANY HAZARDOUS AREA OR WHEN SERVING AN OCCUPANT LOAD OF 50 OR MORE. THE DOOR LATCH SHALL RELEASE WHEN SUBJECTED TO A 8.5-POUND FORCE, AND THE DOOR SHALL BE SET IN MOTION WHEN SUBJECTED TO A 30-POUND FORCE. THE DOOR SHALL SWING TO FULL OPEN POSITION WHEN SUBJECTED TO A 15-POUND FORCE.
2. PROVIDE WEATHER-STRIPPING AT EXTERIOR DOOR(S), HEAD, JAMB, AND SILL.
3. FLOORS OR LANDINGS ARE NOT TO BE MORE THAN 1/2" LOWER THAN THE TOP OF THE THRESHOLD OF THE DOORWAY
4. ALARM LOCK(S) AND PANIC HARDWARE TO BE APPROVED BY THE FIRE MARSHAL.
5. PROVIDE POSITIVE KEY-LOCKING CYLINDER LOCKS
6. ALL PIN-TYPE HINGES WHICH ARE ACCESSIBLE FROM THE OUTSIDE WHEN THE DOOR IS CLOSED SHALL HAVE NON-REMOVABLE HINGE PINS. IN ADDITION, THEY SHALL HAVE A MINIMUM OF 1/4" DIAMETER STEEL JAMB STUD WITH 1/4" MINIMUM PROJECTIONS UNLESS THE HINGES ARE SHAPED TO PREVENT REMOVAL OF THE DOOR IF THE HINGE PINS ARE REMOVED.
7. VERIFY AND PROVIDE LEVER TYPE HARDWARE, PANIC BARS, PUSH-PULL ACTIVATING BARS, OR OTHER HARDWARE DESIGNED TO PROVIDE PASSAGE WITHOUT REQUIRING THE ABILITY TO GRASP THE OPENING HARDWARE.
9. EXIT DOOR(S) SHALL BE OPERABLE FROM THE INSIDE WITHOUT THE USE OF A KEY, SPECIAL KNOWLEDGE, OR EFFORT.
   NOTE: KEY LOCKING HARDWARE MAY BE USED ON THE MAIN EXIT IF THERE IS A READILY VISIBLE, DURABLE SIGN ON OR ADJACENT TO THE DOOR STATING " THIS DOOR MUST REMAIN UNLOCKED DURING BUSINESS HOURS". 1" HIGH (MIN.) LETTERS ON CONTRASTING BACKGROUND.
10. ALL DOORS SHALL HAVE SMOOTH UNINTERRUPTED SURFACE ON BOTTOM 10" OF DOOR PER TITLE 24.
11. ALL WOOD DOORS TO BE PAINT GRADE U.N.O.
12. EVERY REQUIRED PASSAGE DOOR SHALL HAVE NOT LESS THAN 32" CLEAR WIDTH.
13. FIELD VERIFY ALL DIMENSIONS
14. THRESHOLD CHANGE IN LEVEL TO BE BETWEEN 1/4" AND 1/2" AND BEVELED AT A MAXIMUM GRADIENT OF 1:2 (A MAXIMUM 1/4" VERTICAL EDGE IS ALLOWED AT THRESHOLDS)
15. LOCATE LOCKING HARDWARE MAXIMUM ABOVE FLOOR. THE EFFORT TO OPERATE MUST BE WITHIN THE FOLLOWING PRESSURE ALLOWANCES:
    A. INTERIOR DOORS: 5 POUNDS MAX.
    B. EXTERIOR DOORS: 8 ½ POUNDS MAX.
    C. FIRE DOORS: 15 POUNDS MAX.

    A PULL OR PUSH EFFORT BEING APPLIED AT RIGHT ANGLES TO HINGED DOORS AND AT THE CENTER PLANE OF SLIDING OR FOLDING DOORS. COMPENSATING DEVICES OR AUTOMATIC DOOR OPERATIONS MAY BE UTILIZED TO MEET ABOVE STANDARDS.
16. PROVIDE A LEVEL CLEAR LANDING ON EACH SIDE OF DOOR. COMPLY AS FOLLOWS:
    A. LEVEL AREA IN DIRECTION OF DOOR SWING TO BE A MINIMUM OF 60" IN LENGTH
    B. LENGTH OPPOSITE THE DOOR SWING DIRECTION TO BE A MIN. OF 44 INCHES WHEN DOOR HAS NO CLOSURE AND 48 INCHES WHEN DOOR HAS A CLOSURE
    C. SURFACE SLOPE OF THE LEVEL AREA MUST NOT EXCEED 2% GRADIENT
17. ALL DOORS TO BE MASTER KEYED AND COORDINATED WITH THE OWNER.
18. VERIFY AND PROVIDE HARDWARE AND MOUNTING HEIGHTS COMPLIANT WITH FEDERAL, STATE AND LOCAL ACCESSIBILITY LAWS.
19. SURFACE SLOPE OF LEVEL LANDING AREA MUST NOT EXCEED 2 % (1:50 GRADE)
20. PROVIDE 24" MIN. STRIKE SIDE CLEARANCE ON LATCH SIDE AND 12" MIN ON PUSH SIDE OF EXTERIOR DOORS. INTERIOR DOORS MAY HAVE AN 18" STRIKE CLEARANCE
21. ALL GLASS WITHIN 24 INCHES OF DOOR JAMB OR SUBJECT TO HUMAN IMPACT SHALL BE TEMPERED (SAFETY GLASS)
22. TACTILE WARNING INSERT ON LEVER IS REQUIRED FOR JANITOR, MECHANICAL/ELECTRICAL OR STORAGE ROOMS.
23. EXTERIOR DOOR FRAMES INSTALLED IN C.M.U. OR CONCRETE WALL TO BE SOLID OR GROUTED SOLID. 3 JAMB ANCHORS SHALL BE PROVIDED EACH SIDE.
24. ALL EXTERIOR METAL DOORS TO BE INSULATED.
25. EVERY DOORWAY WHICH IS LOCATED WITHIN AN ACCESSIBLE PATH OF TRAVEL SHALL BE OF A SIZE TO PERMIT THE INSTALLATION OF A DOOR NOT LESS THAN 3' IN WIDTH AND NOT LESS THAN 6'-8" IN HEIGHT. WHEN INSTALLED, EXIT DOORS SHALL BE CAPABLE OF OPENING SO THAT THE CLEAR WIDTH OF THE EXIT IS NOT LESS THAN 32", MEASURED BETWEEN THE FACE OF THE DOOR AND THE OPPOSITE STOP
26. BOTTOM 10" OF ALL DOORS SHALL HAVE SMOOTH UNITERUPTED SURFACE FOR OPENING BY WHEEL CHAIR FOOT REST.
27. LATCHING DOORS HAND PULL EXERTION MUST NOT EXCEED 8.5 POUNDS FOR EXTERIOR DOORS AND 5 POUNDS FOR INTERIOR DOORS WITH A PULL OR PUSH EFFORT BEING APPLIED AT RIGHT ANGLES TO HINGED DOORS AND AT THE CENTER PLANE OF SLIDING OPERATIONS MAY BE UTILIZED TO MEET THE ABOVE STANDARDS
28. HAND-ACTIVATED DOOR OPENING HARDWARE SHALL BE CENTERED BETWEEN 30" AND 44" ABOVE FINISHED FLOOR
29. MANUALLY OPERATED EDGE OR SURFACE-MOUNTED FLUSH BOLTS AND SURFACE BOLTS ARE PROHIBITED. WHEN EXIT DOORS ARE USED IN PAIRS AND APPROVED AUTOMATIC FLUSH BOLTS ARE USED, THE DOOR LEAF HAVING THE AUTOMATIC FLUSH BOLTS SHALL HAVE NO DOOR KNOB OR SURFACE-MOUNTED HARDWARE. THE UNLATCHING OF ANY LEAF SHALL NOT REQUIRE MORE THAN ONE OPERATION.
30. PROVIDE (3) SILENCERS IN SINGLE LEAF DOORS (MIN.).
31. THE WIDTH OF THE LEVEL AREA ON THE SIDE TO WHICH THE DOOR SWINGS SHALL EXTEND A MINIMUM OF 24" PAST THE STRIKE EDGE OF THE DOOR FOR EXTERIOR DOORS AND A MINIMUM OF 18" PAST THE STRIKE EDGE FOR INTERIOR DOORS
32. ALL ENTRANCES AND ALL EXTERIOR GROUND FLOOR EXIT DOORS TO BUILDINGS AND FACILITIES SHALL BE MADE ACCESSIBLE TO PERSONS WITH DISABILITIES
33. ALL DOOR AND DOOR FUNCTIONS SHALL MEET CALIFORNIA TITLE 24 ACCESSIBILTY REQUIREMENTS AND UBC/CBC CHAPTER 10 EXITING REQUIREMENTS
34. ALL EXTERIOR HOLLOW METAL DOORS SHALL BE GALVANIZED AND INSULATED.
35. INSTALL WEATHER STRIPPING IN COMPLIANCE WITH STATE ENERGY CONSERVATION REG. SEC 2-5317 AT ALL DOORS BETWEEN CONDITIONED AND NON-CONDITIONED SPACES OR EXTERIOR
36. TYPICAL SEALANT AT METAL DOOR FRAMES (U.V. RESISTANT IF EXTERIOR) TO WOOD, CONCRETE, OR MASONRY USE "DAP", DUOFLEX, "VOLAM", OR SIKAFLEX 1-A POLYURETHANE SEALANT. AT THRESHOLDS AND WINDOW SILLS USE "SCHNEE MOOREHEAD" #5520 BEDDING SEALANT, SIKAFLEX 1-A POLYURETHANE SELANT OR EQUAL. AT GLASS TO METAL FRAMES USE "DOWCORNING" GASKETSELANT OR EQUAL.

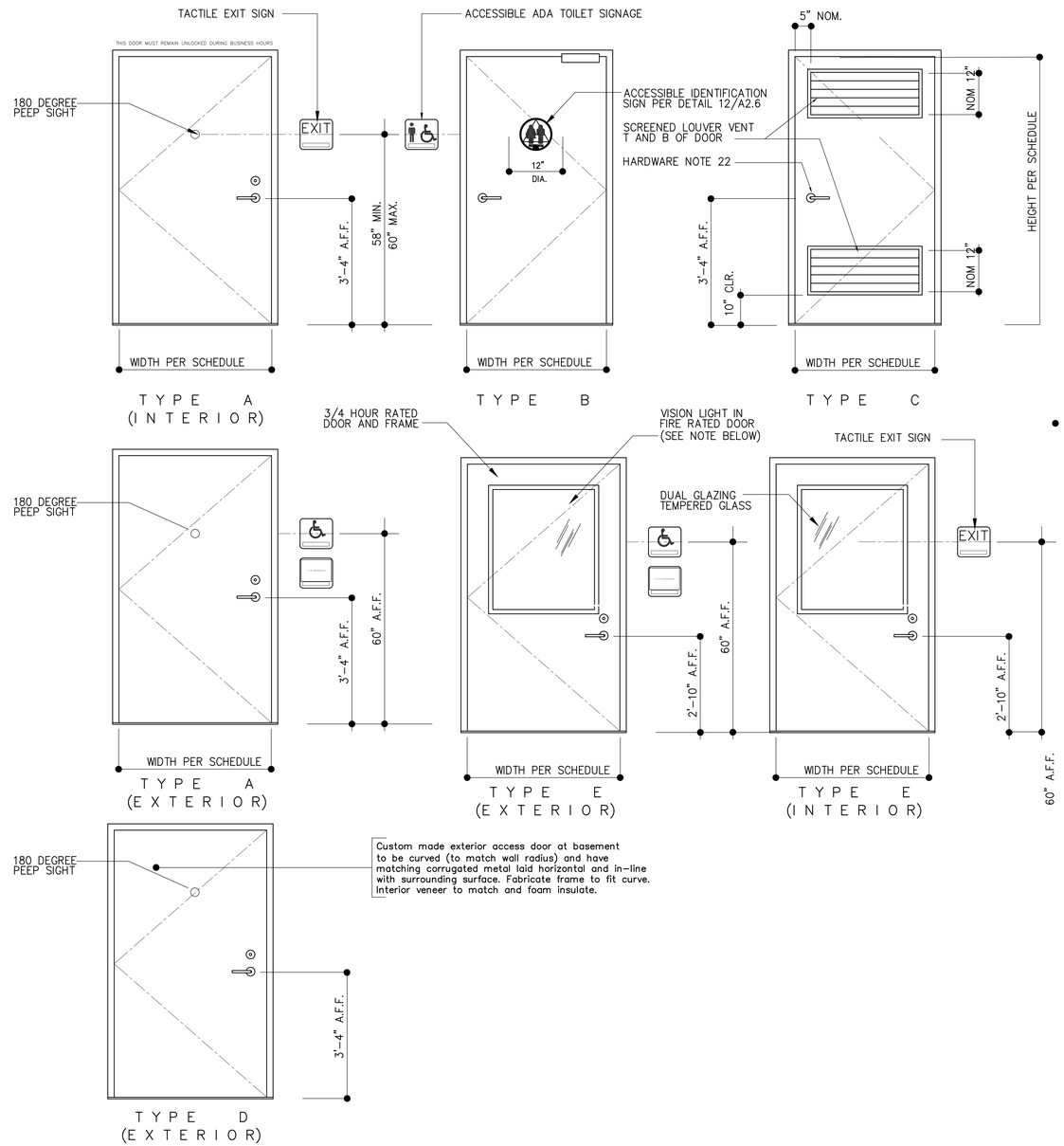

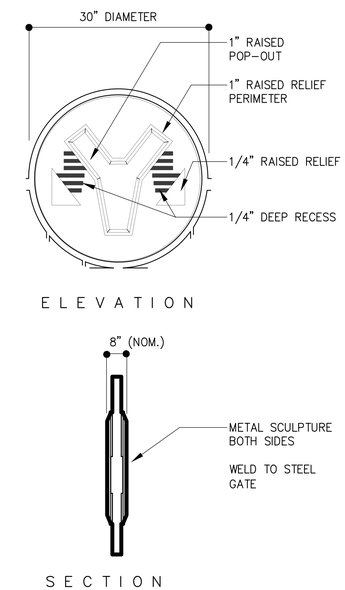

SCULPTURE ARTIST SHALL SUBMIT DRAWINGS AND TECHNIQUES TO BE EMPLOYED TO GIVE THE IMPRESSION THAT THE FINAL SCULPTURED MATERIAL HAS BEEN RAISED ABOVE THE BACKGROUND PLANE AND TO ALSO INCLUDE COUNTER-RELIEF.

GENERAL CONTRACTOR SHALL HIRE ARTIST AND SUBMIT QUALIFICATIONS AND EXAMPLES FOR REVIEW AND APPROVAL

METALIC SCULPTURE RELIEF 1

SEE GATE DETAIL ON SHEET A2.6 FOR APPLICATION

NOTE: DOOR IN REQUIRED FIRE RATED ASSEMBLY IS RATED FOR THREE-FOURTHS OF THE RATING OF THE SURROUNDING WALL. A ¾ HOUR RATING IS THUS REQUIRED FOR THE REQUIRED ONE-HOUR ASSEMBLY. ¼" WIRE GLASS AND CERAMIC GLASS ARE THE MOST COMMON TYPES OF GLAZING USED IN THE RATED DOOR. THE HOURLY RATING DICTATES THE NUMBER AND MAXIMUM SIZE OF THE VISION LIGHT. THE VISION LIGHT KIT WITH FRAME MUST BE APPROVED FOR USE IN THE FIRE RATED DOOR.

Narkweather ARCHITECTS INC.
73 330 HWY 111, SUITE A / PALM DESERT, CA 92260-4016
PHONE: (760) 346-4090 / E-MAIL: info@narkweather.net

OWNERSHIP OF DOCUMENTS DRAWINGS AND SPECIFICATIONS AS INSTRUMENTS OF SERVICE ARE AND SHALL REMAIN THE PROPERTY OF THE DESIGNER WHETHER THE PROJECT FOR WHICH THEY WERE PREPARED IS EXECUTED OR NOT. THEY ARE NOT TO BE USED ON OTHER PROJECTS OR EXTENSIONS TO THIS PROJECT EXCEPT BY AGREEMENT IN WRITING AND WITH APPROPRIATE COMPENSATION TO Narkweather Architects Inc.
COPYRIGHT 2016 Narkweather Architects

CITY OF RANCHO MIRAGE

PROJECT DESCRIPTION: OBSERVATORY

SITE ADDRESS: Rancho Mirage Public Library, 71-100 California 111, Rancho Mirage, CA 92270

SHEET CONTENT: DOOR SCHEDULE

DRAWING SCALE: SCALE: (NONE)

ISSUE DATE		
MONTH	DAY	YEAR
SEPT.	29	2016

1 REVISION DATE:
2 REVISION DATE:
3 REVISION DATE:
4 REVISION DATE:
REVISION DATE:

(FOR CITY ENGINEER STAMP)

RECOMMENDED FOR APPROVAL BY: LELAND E. COLE, R.C.E. 47159, EXP. 12/31/17 — DATE 9/27/16

APPROVED BY CITY OF RANCHO MIRAGE: WILLIAM A. KIRK, CITY ENGINEER, R.C.E. 43910, EXP. 6/30/2017 — DATE

DRAWING NUMBER A2.5

SHEET # 21 OF 56

PRIVATE REFERENCE #

CITY REFERENCE #

Bid Set - 10/07/2016

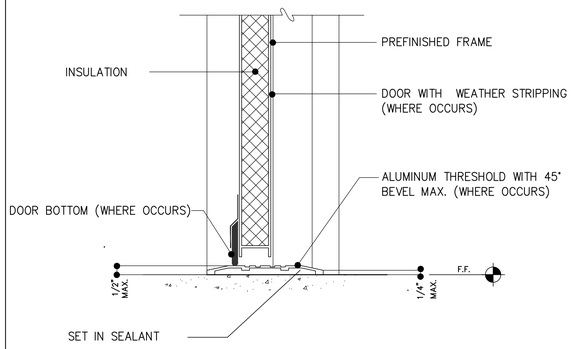

DOOR THRESHOLD 01
SCALE: N.T.S.

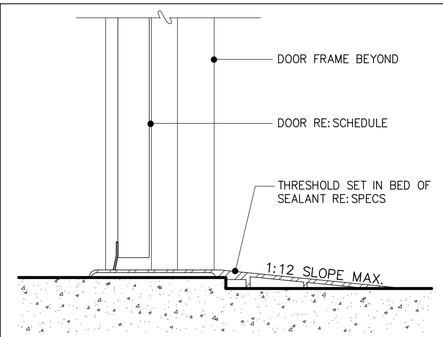

SCALE: N.T.S.

OFFSET THRESHOLD SECTION 02
SCALE: N.T.S.

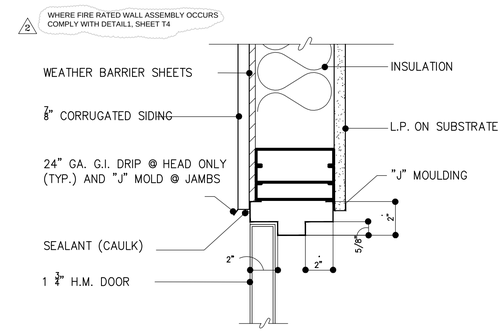

EXTERIOR DOOR HEADER 03
SCALE: N.T.S.

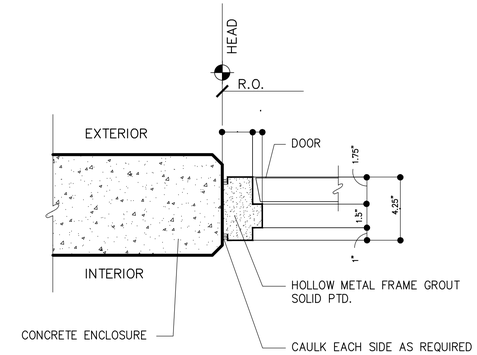

SCALE: N.T.S.

HOLLOW METAL DOOR JAMB 04
SCALE: N.T.S.

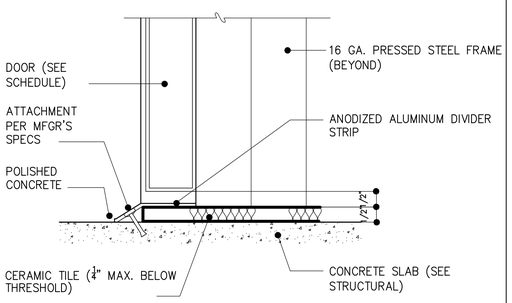

DOOR SILL 05
SCALE: N.T.S.

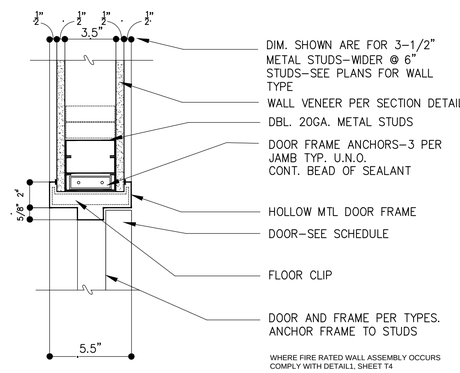

DOOR HEAD / JAMB 06
SCALE: N.T.S.

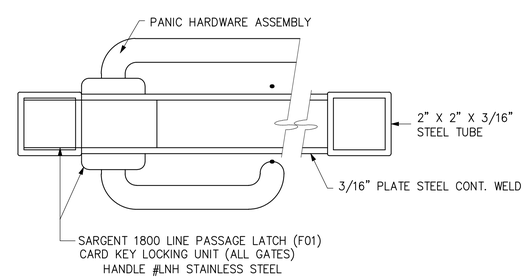

GATE LATCH 07
SCALE: N.T.S.

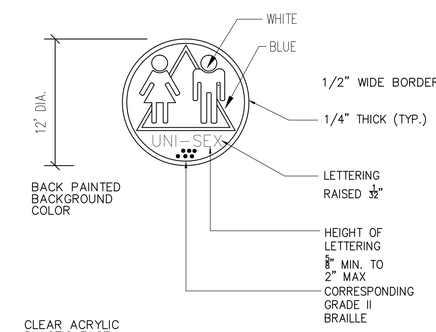

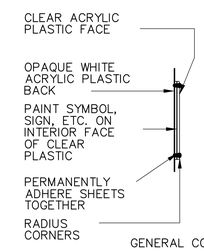

NOTES:
1. ATTACH SIGNS USING (3) THREE FLATHEAD COUNTERSUNK SCREWS TO SOLID BACKING &. ADHESIVE TO BACK.
2. SIGNS ARE TO BE MOUNTED 5'-0" FROM CENTER TO FINISHED FLOOR ON WALL. ADJACENT TO TOILET ROOM DOOR STRIKE.
3. SIGNS ARE TO BE DISTINCTLY DIFFERENT FROM THE WALL IN COLOR AND CONTRAST.

GENERAL CONTRACTOR SHALL HIRE ARTIST AND SUBMIT QUALIFICATIONS AND EXAMPLES FOR REVIEW AND APPROVAL

THE CHARACTER AND BACKGROUND SHALL BE EGGSHELL MATTE OR NON-GLARE FINISH.

CHARACTER AND SYMBOL SHALL CONTRAST WITH THEIR BACKGROUND OR DARK CHARACTER ON A LIGHT BACKGROUND.

EACH UNISEX TOILET SHALL HAVE THE TACTILE SIGN AND RAISED LETTERS IN BRAILLE

LETTERS SHALL BE RAISED 1/32", UPPER CASE ACCOMPANIED W/ GRADE 2 BRAILLE. RAISED CHARACTERS SHALL BE AT LEAST 5/8" HIGH AND 2" MAXIMUM.

DEPICTED SIGNS ABOVE ARE TO BE MOUNTED ON THE DOOR FACE AT 56" to 60" ABOVE THE FINISH FLOOR TO THE CENTERLINE OF THE SIGN. AN ADDITIONAL ACCESSIBILITY SIGN IS REQUIRED AT THE LATCH SIDE OF THE DOOR AT THE SAME HEIGHT.
MOUNTING SHALL BE SO A PERSON MAY APPROACH W/IN 3" OF SIGN W/ OUT ENCOUNTERING PROTRUDING OBJECTS OR STANDING W/ IN THE SWING OF A DOOR.

SWINGING GATE SURFACES WITHIN 10 INCHES OF FLOOR OR GROUND SURFACE MEASURED VERTICALLY SHALL HAVE A SMOOTH SURFACE ON THE PUSH SIDE EXTENDING FULL WIDTH OF THE GATE.

ACCESSIBLE IDENTIFICATION 12
SCALE: N.T.S.

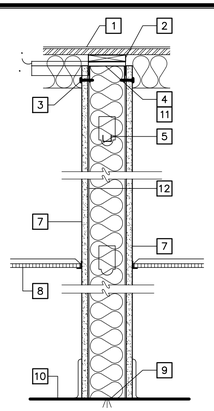

1. BUILT UP ROOF ON 3/8" PLYWOOD
2. CONT. 2x BLOCKING
3. FIRST ROW OF SCREWS TO RUN THROUGH TOP PLATE ONLY. DO NOT PENETRATE DEEP LEG TRACK
4. ATTACH 16 GA. DEEP LEG TRACK TO BLOCKING WITH SCREWS @ 24"O.C. MAX.
5. 3/4" C.R. CHANNEL CONT. THRU UPPER MOST SLOT IN STUDS WHEN GYP. BD. IS EXTENDED TO DECK PROVIDE CHANNEL AT CEILING LINE WHEN GYP. BD. STOPS @ 6" ABOVE CLG. GRID LINE
6. INSULATION
7. WALL VENEER PER SECTIONS
8. CEILING WHERE OCCURS
9. CONT. BOTTOM TRACK SECURED TO FLOOR WITH POWDER ACTIVATED, ITW RAMSET/REDHEAD, CATALOG NO. 1512 DRIVE PINS @ 24" O.C. I.C.B.O. #1639 & #2388
10. FINISH FLOOR
11. DEEP LEG TRACK
12. 20 GA. METAL STUDS PER PLAN

STUD WALL ASSEMBLY SECTION 09

INTERIOR METAL STUDS PER ICBO #4943

TYPE	MAX. CLEAR HEIGHT (1) 16" O.C.	24" O.C.
3-5/8" x 1-5/8" x 20 GAUGE	17'-0"	15'-0"
3-5/8" x 1-5/8" x 18 GAUGE	18'-6"	16'-0"
3-5/8" x 1-5/8" x 16 GAUGE	20'-0"	17'-6"
6" x 1-5/8" x 20 GAUGE	25'-6"	22'-6"
6" x 1-5/8" x 18 GAUGE	27'-6"	24'-0"

(1) WHERE LATERAL BRACE SUPPORT IS PROVIDED, CLEAR HEIGHT IS THE DISTANCE BETWEEN LATERAL SUPPORTS AND FLOOR OR ROOF CONNECTIONS

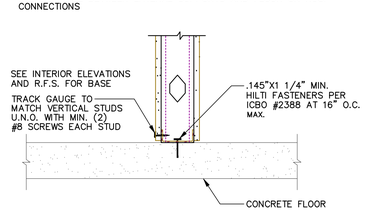

STUD WALL SILL CONNECTION 10
SCALE: N.T.S.

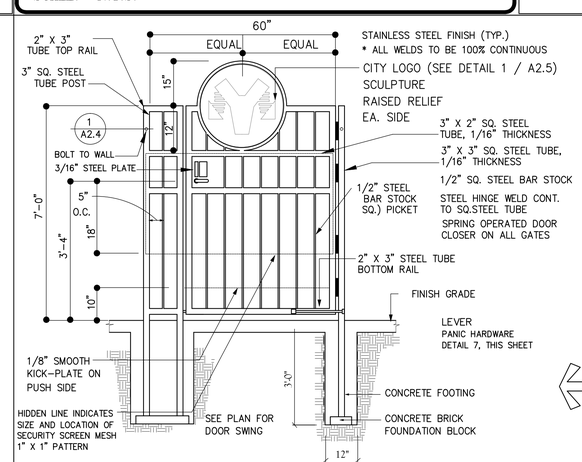

SECURITY GATE ELEVATION 11
SCALE: N.T.S.

Narkweather ARCHITECTS INC.
73 330 HWY 111, SUITE A / PALM DESERT, CA 92260-4016
PHONE: (760) 346-4090 / E-MAIL: info@narkweather.net

OWNERSHIP OF DOCUMENTS
DRAWINGS AND SPECIFICATIONS AS INSTRUMENTS OF SERVICE ARE AND SHALL REMAIN THE PROPERTY OF THE DESIGNER WHETHER THE PROJECT FOR WHICH THEY WERE PREPARED IS EXECUTED OR NOT. THEY ARE NOT TO BE USED ON OTHER PROJECTS OR EXTENSIONS TO THIS PROJECT EXCEPT BY AGREEMENT IN WRITING AND WITH APPROPRIATE COMPENSATION TO Narkweather Architects Inc.
COPYRIGHT 2016 Narkweather Architects

CITY OF RANCHO MIRAGE
OBSERVATORY
PROJECT DESCRIPTION: Rancho Mirage Public Library
SITE ADDRESS: 71-100 California 111, Rancho Mirage, CA 92270

SHEET CONTENT
DOOR AND GATE DTLS

DRAWING SCALE:
SCALE: (NONE)

ISSUE DATE		
MONTH	DAY	YEAR
SEPT.	29	2016

1 REVISION DATE:
2 REVISION DATE:
3 REVISION DATE:
4 REVISION DATE:
REVISION DATE:

I AM OUR RANGER SIGN?
RECOMMENDED FOR APPROVAL BY: LELAND E. COLE R.C.E. 47159 EXP. 12/31/17 DATE 9/27/16
APPROVED BY CITY OF RANCHO MIRAGE: WILLIAM A. EKOS, CITY ENGINEER R.C.E. 43910, EXP. 6/30/2017 DATE

DRAWING NUMBER
A2.6
SHEET # 22 OF 56
PRIVATE REFERENCE #
CITY REFERENCE #

Bid Set - 10/07/2016

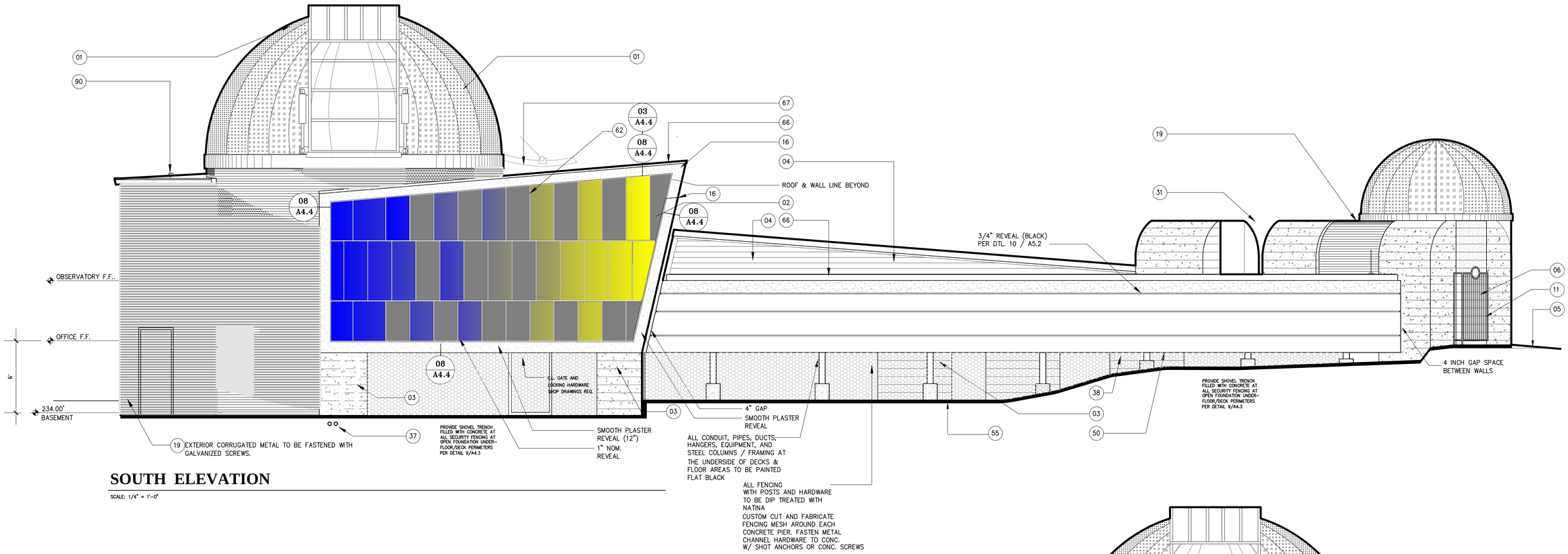

SOUTH ELEVATION

SCALE: 1/4" = 1'-0"

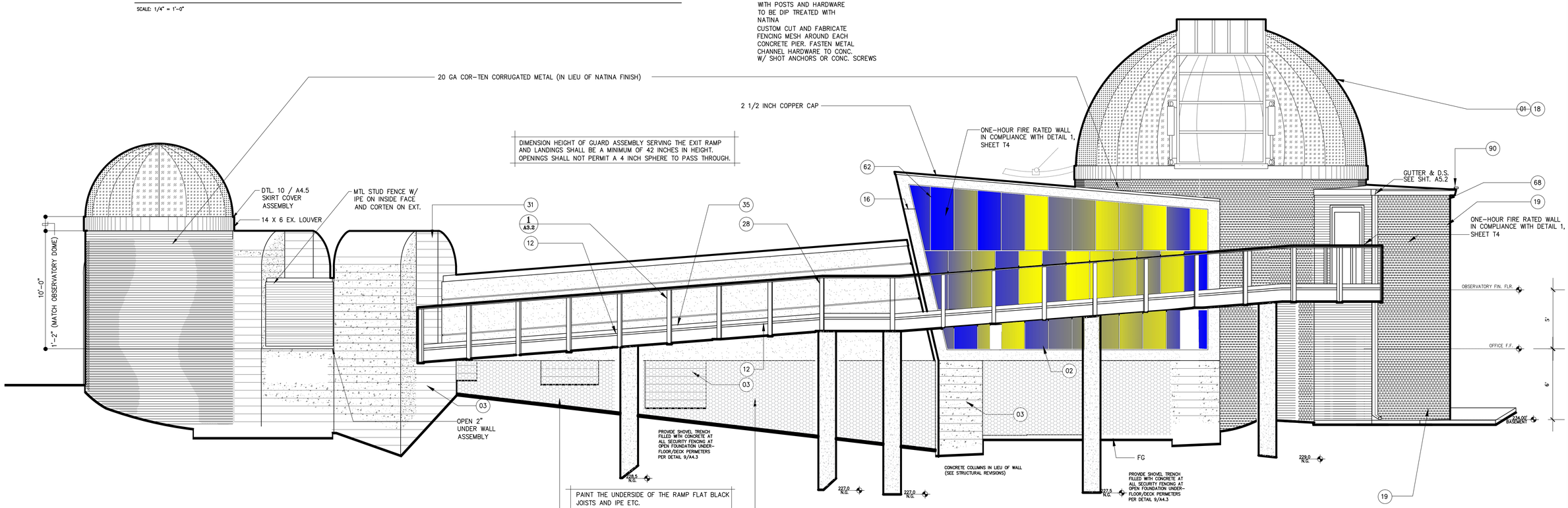

NORTH ELEVATION

SCALE: 1/4" = 1'-0"

SEE SHEET T3 FOR
PROJECT KEY NOTES

Narkweather ARCHITECTS INC.
73 330 HWY 111, SUITE A / PALM DESERT, CA 92260-4016
PHONE: (760) 346-4090 / E-MAIL: info@narkweather.net

OWNERSHIP OF DOCUMENTS
DRAWINGS AND SPECIFICATIONS AS INSTRUMENTS OF SERVICE ARE AND SHALL REMAIN THE PROPERTY OF THE DESIGNER WHETHER THE PROJECT FOR WHICH THEY WERE PREPARED IS EXECUTED OR NOT. THEY ARE NOT TO BE USED ON OTHER PROJECTS OR EXTENSIONS TO THIS PROJECT EXCEPT BY AGREEMENT IN WRITING AND WITH APPROPRIATE COMPENSATION TO Narkweather Architects Inc.
COPYRIGHT 2016 Narkweather Architects

CITY OF RANCHO MIRAGE
OBSERVATORY
Rancho Mirage Public Library
[illegible]

SHEET CONTENT
EXTERIOR ELEVATIONS

DRAWING SCALE:
SCALE: 1/4" = 1'-0"

ISSUE DATE		
MONTH	DAY	YEAR
SEPT.	29	2016

1	REVISION DATE:
2	REVISION DATE:
3	REVISION DATE:
4	REVISION DATE:
	REVISION DATE:

(FOR CITY USE ONLY)
RECOMMENDED FOR APPROVAL BY:
LELAND E. COLE 9/27/16
R.C.E. 47159 EXP. 12/31/17 DATE
APPROVED BY CITY OF RANCHO MIRAGE:
WILLIAM A. ENOS, CITY ENGINEER DATE
R.C.E. 43915 EXP. 6/30/2017

DRAWING NUMBER
A3.1
SHEET # 23 OF 56
PRIVATE REFERENCE #
CITY REFERENCE #

Bid Set - 10/07/2016

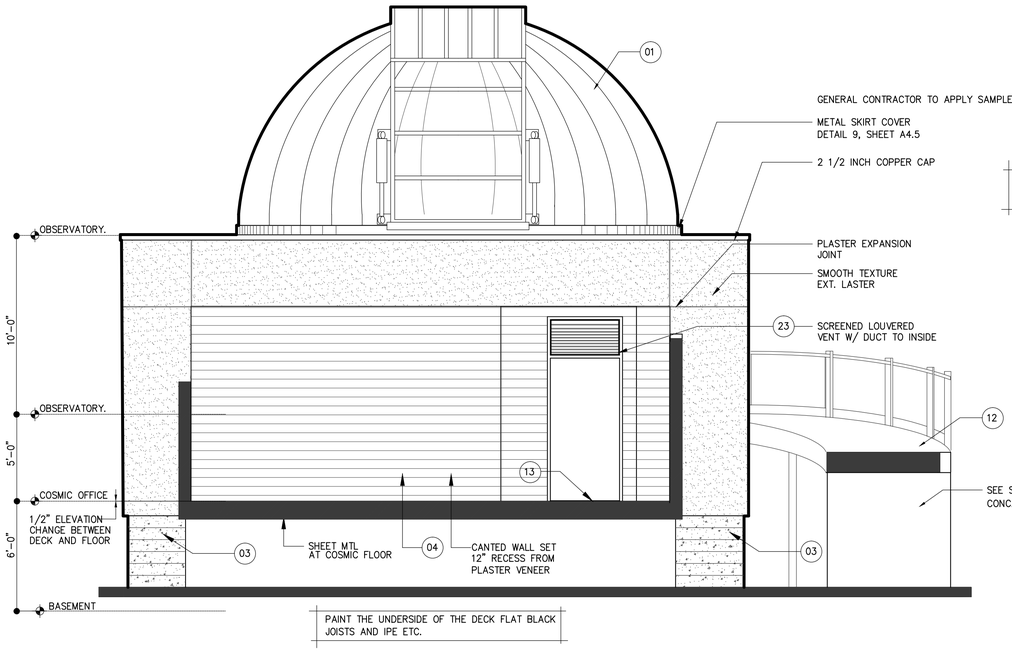

EAST ELEVATION SECTION

SCALE: 1/4" = 1'-0"

A / A3.2

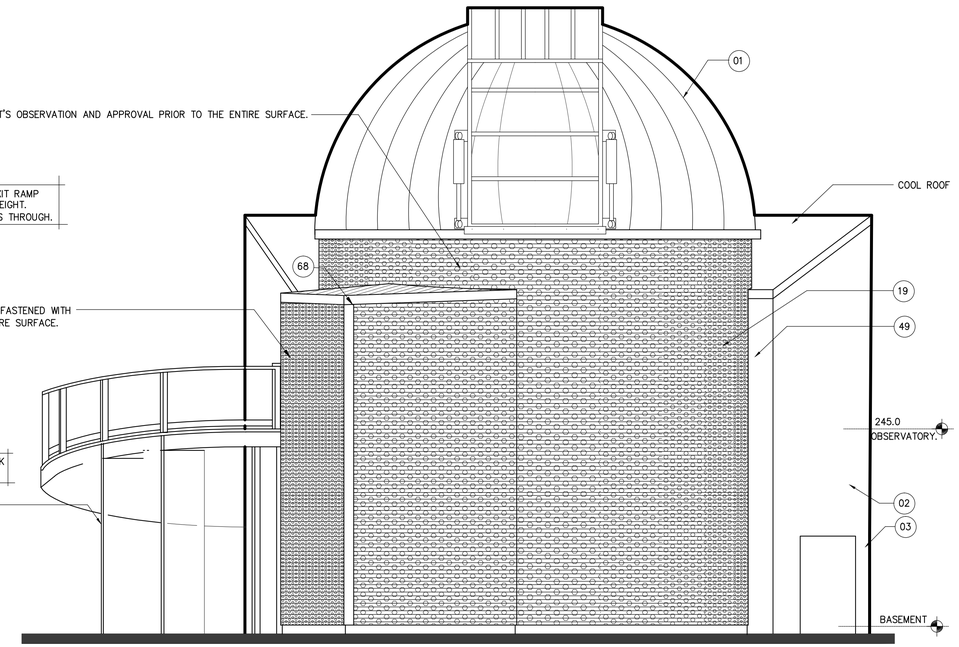

WEST ELEVATION

SCALE: 1/4" = 1'-0"

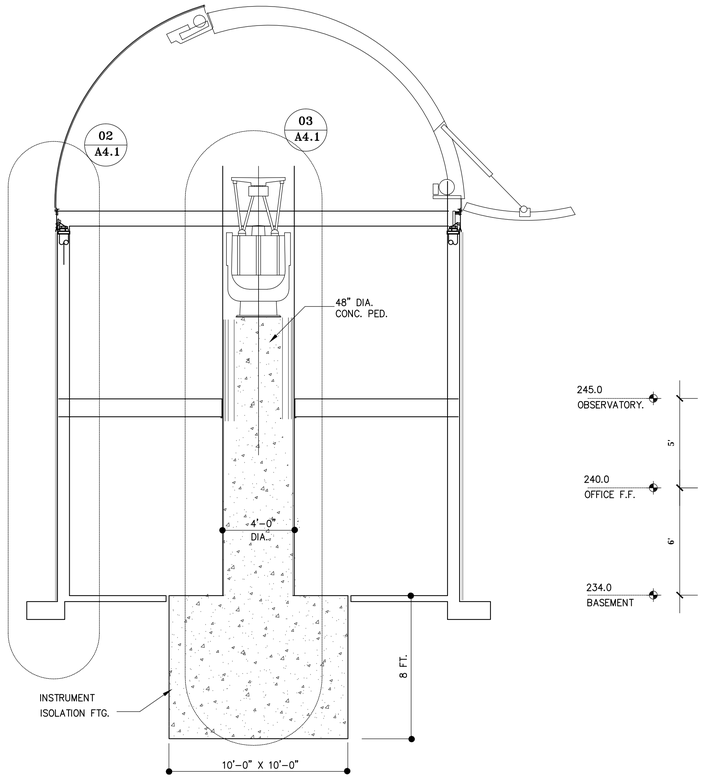

OBSERVATORY SECTION

SCALE: 1/4" = 1'-0"

B / A3.2

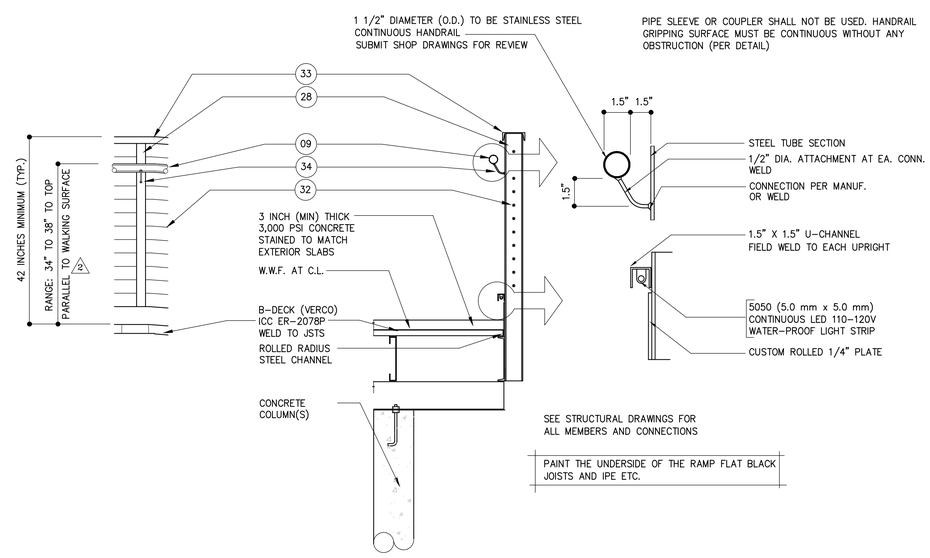

RAMP SECTION DETAILS

SCALE: 3/4" = 1'-0"

1 / A3.2

SEE SHEET T3 FOR PROJECT KEY NOTES

Narkweather ARCHITECTS INC.
73 330 HWY 111, SUITE A / PALM DESERT, CA 92260-4016
PHONE: (760) 346-4090 / E-MAIL: info@narkweather.net

OWNERSHIP OF DOCUMENTS
DRAWINGS AND SPECIFICATIONS AS INSTRUMENTS OF SERVICE ARE AND SHALL REMAIN THE PROPERTY OF THE DESIGNER WHETHER THE PROJECT FOR WHICH THEY WERE PREPARED IS EXECUTED OR NOT. THEY ARE NOT TO BE USED ON OTHER PROJECTS OR EXTENSIONS TO THIS PROJECT EXCEPT BY AGREEMENT IN WRITING AND WITH APPROPRIATE COMPENSATION TO Narkweather Architects Inc.
COPYRIGHT 2016 Narkweather Architects

CITY OF RANCHO MIRAGE

PROJECT DESCRIPTION: OBSERVATORY
Rancho Mirage Public Library

SITE ADDRESS: 71-100 California 111, Rancho Mirage, CA 92270

SHEET CONTENT
ELEVATIONS SECTIONS / DETAILS

DRAWING SCALE: AS NOTED

ISSUE DATE		
MONTH	DAY	YEAR
SEPT.	29	2016

1	REVISION DATE:
2	REVISION DATE:
3	REVISION DATE:
4	REVISION DATE:
	REVISION DATE:

(PLAN CHECK ENGINEER STAMP)

RECOMMENDED FOR APPROVAL BY: LELAND E. COLE
REG. 47159 EXP. 12/31/17
DATE 9/27/16

APPROVED BY CITY OF RANCHO MIRAGE:
WILLIAM A. EWIG, CITY ENGINEER
R.C.E. 43910, EXP. 6/30/2017
DATE

DRAWING NUMBER
A3.2
SHEET # 24 OF 56
PRIVATE REFERENCE #
CITY REFERENCE #

Bid Set - 10/07/2016

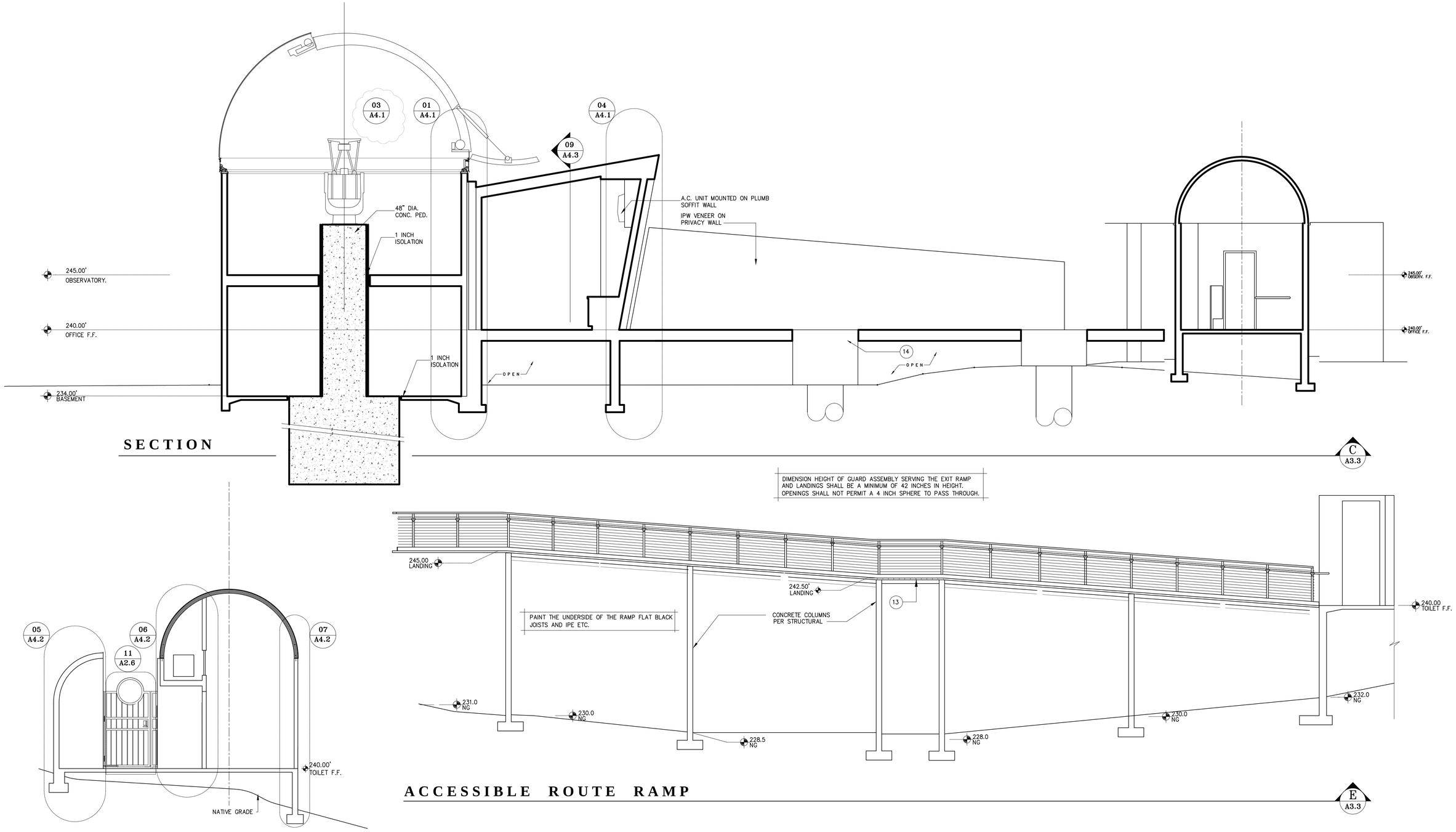

SECTION

ACCESSIBLE ROUTE RAMP

E
A3.3

BUILDING SECTION

D
A3.3

SEE SHEET T3 FOR
PROJECT KEY NOTES

Narkweather
ARCHITECTS INC.
73 330 HWY 111, SUITE A / PALM DESERT, CA 92260-4016
PHONE: (760) 346-4090 / E-MAIL: info@narkweather.net

OWNERSHIP OF DOCUMENTS
DRAWINGS AND SPECIFICATIONS AS INSTRUMENTS OF SERVICE ARE AND SHALL REMAIN THE PROPERTY OF THE DESIGNER WHETHER THE PROJECT FOR WHICH THEY WERE PREPARED IS EXECUTED OR NOT. THEY ARE NOT TO BE USED ON OTHER PROJECTS OR EXTENSIONS TO THIS PROJECT EXCEPT BY AGREEMENT IN WRITING AND WITH APPROPRIATE COMPENSATION TO Narkweather Architects Inc.
COPYRIGHT 2016 Narkweather Architects

CITY OF RANCHO MIRAGE

OBSERVATORY
Rancho Mirage Public Library

SHEET CONTENT

BLDG. SECTIONS

DRAWING SCALE:
SCALE: 1/4" = 1'-0"

ISSUE DATE		
MONTH	DAY	YEAR
SEPT.	29	2016

1 REVISION DATE:
2 REVISION DATE:
REVISION DATE:
REVISION DATE:
REVISION DATE:

RECOMMENDED FOR APPROVAL BY:
LELAND E. COLE
R.C.E. 47159 EXP. 12/31/17
9/27/16
DATE
APPROVED BY CITY OF RANCHO MIRAGE:
WILLIAM A. ENOS, CITY ENGINEER
R.C.E. 43910, EXP. 6/30/2013
DATE

DRAWING NUMBER
A3.3
SHEET # 25 OF 56

Bid Set - 10/07/2016

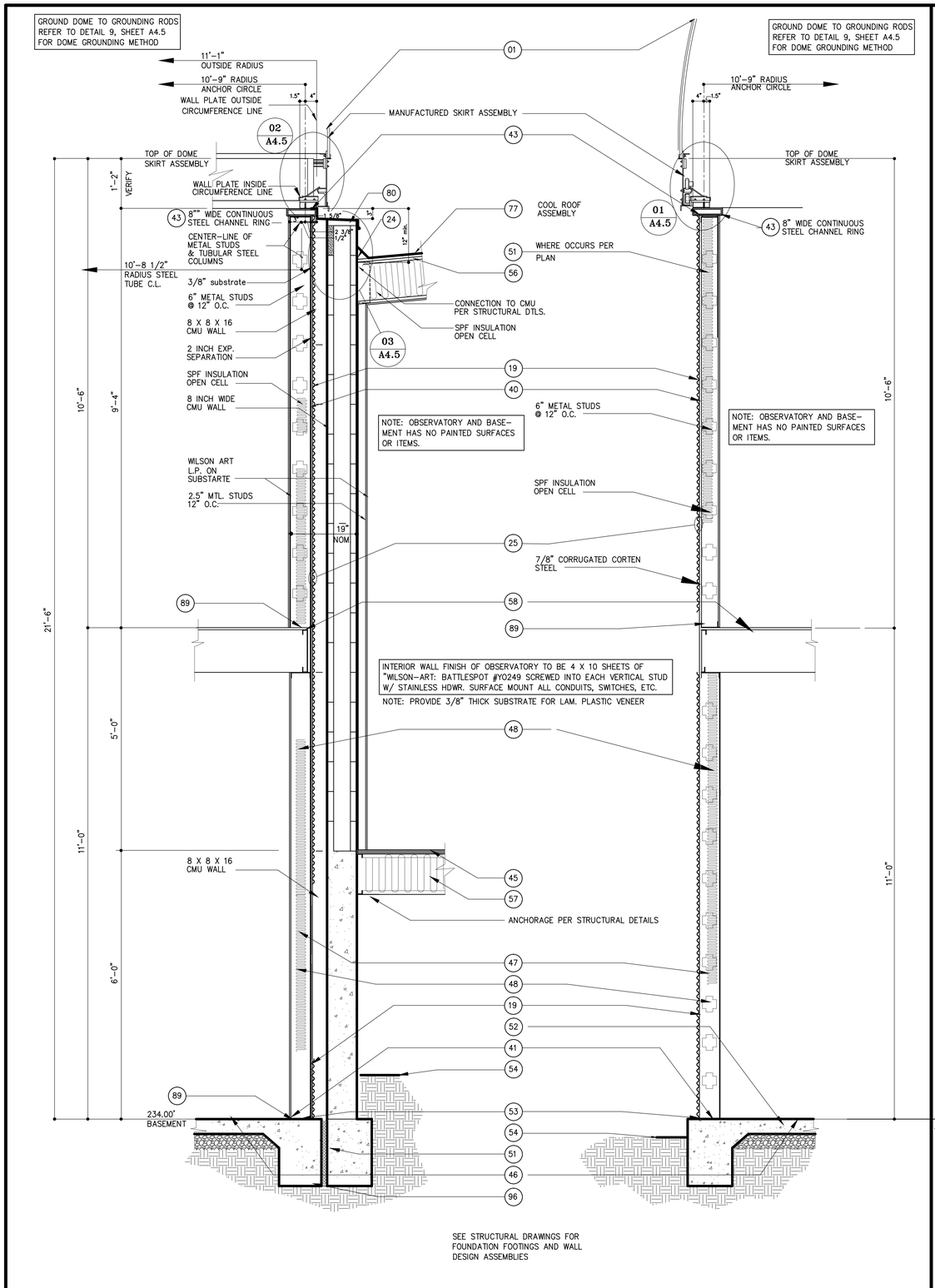

WALL SECTION 01
SEE SHEET T3 FOR KEYED REFERENCE NOTES

WALL SECTION 02
SEE SHEET T3 FOR KEYED REFERENCE NOTES

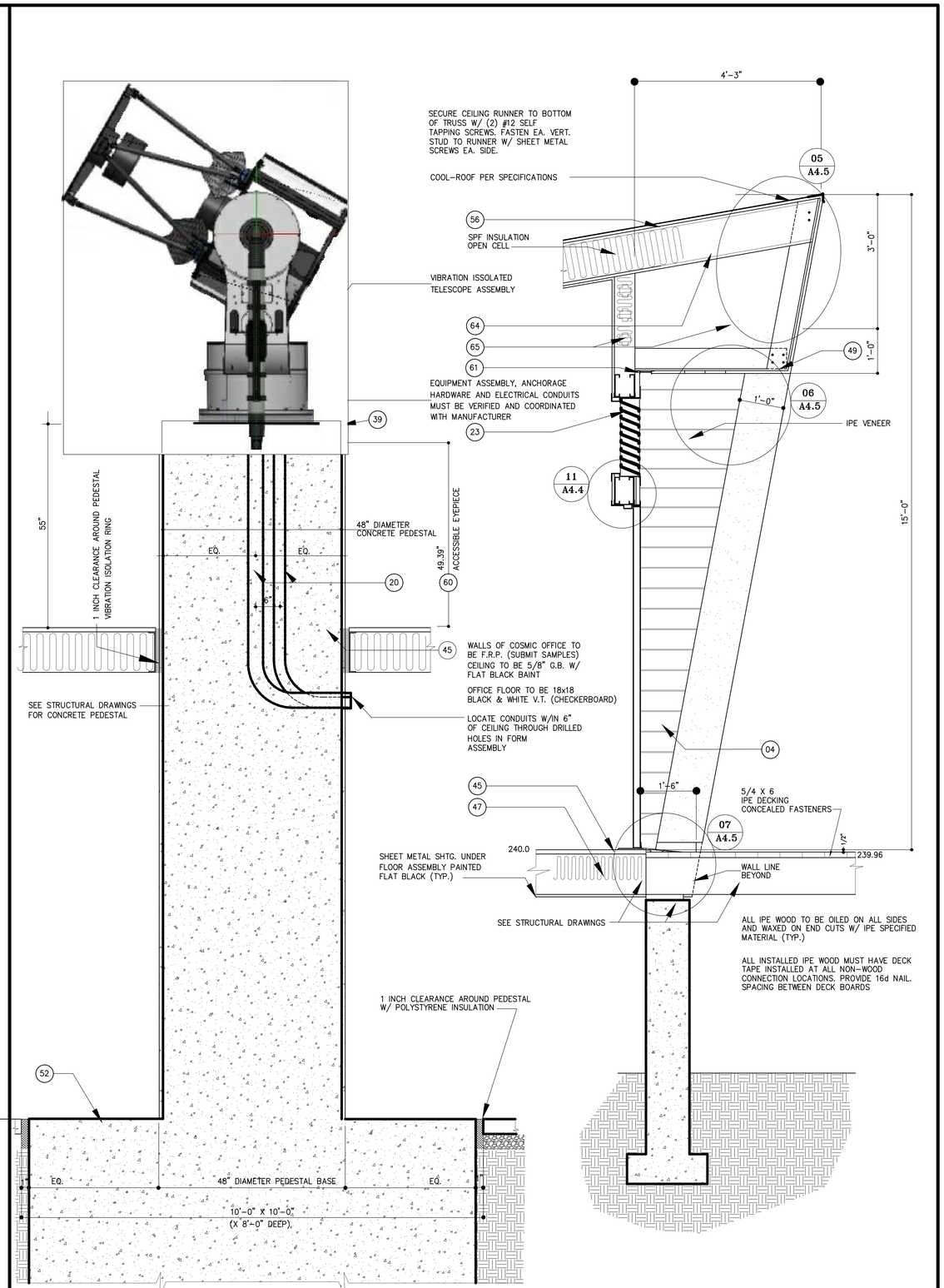

PEDESTALL SECTION 03
SEE SHEET T3 FOR KEYED REFERENCE NOTES

WALL SECTION 04
SEE SHEET T3 FOR KEYED REFERENCE NOTES

Narkweather ARCHITECTS INC.
73 330 HWY 111, SUITE A / PALM DESERT, CA 92260-4016
PHONE: (760) 346-4090 / E-MAIL: info@narkweather.net

OWNERSHIP OF DOCUMENTS
DRAWINGS AND SPECIFICATIONS AS INSTRUMENTS OF SERVICE ARE AND SHALL REMAIN THE PROPERTY OF THE DESIGNER WHETHER THE PROJECT FOR WHICH THEY WERE PREPARED IS EXECUTED OR NOT. THEY ARE NOT TO BE USED ON OTHER PROJECTS OR EXTENSIONS TO THIS PROJECT EXCEPT BY AGREEMENT IN WRITING AND WITH APPROPRIATE COMPENSATION TO Narkweather Architects Inc.
COPYRIGHT 2016 Narkweather Architects

CITY OF RANCHO MIRAGE

PROJECT DESCRIPTION: OBSERVATORY
Rancho Mirage Public Library
SITE ADDRESS: 71-100 California 111, Rancho Mirage, CA 92270

SHEET CONTENT
WALL SECTIONS

DRAWING SCALE: 3/4" = 1'-0"

ISSUE DATE		
MONTH	DAY	YEAR
SEPT	29	2016

1	REVISION DATE:
2	REVISION DATE:
	REVISION DATE:
	REVISION DATE:
	REVISION DATE:

(FOR CITY USE ONLY STAMP)
RECOMMENDED FOR APPROVAL BY: LELAND E. COLE 9/27/16 DATE
R.C.E. 47159 EXP. 12/31/17
APPROVED BY CITY OF RANCHO MIRAGE: DATE
WILLIAM A. ENOS, CITY ENGINEER R.C.E. 43916, EXP. 6/30/2017

DRAWING NUMBER
A4.1
SHEET # 26 OF 56
PRIVATE REFERENCE #
CITY REFERENCE #

Bid Set - 10/07/2016

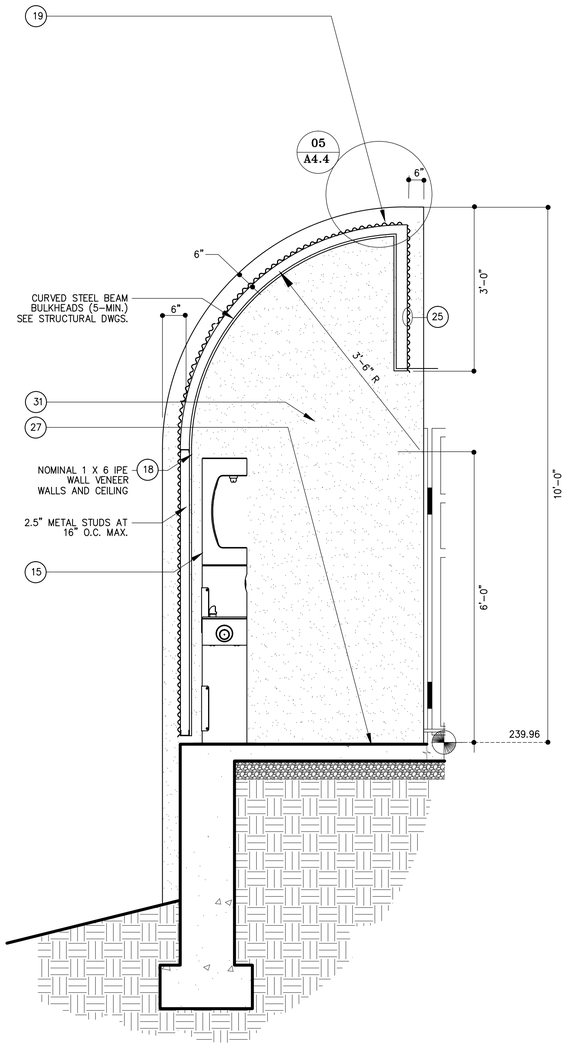

WALL SECTION 05

SEE SHEET T3 FOR KEYED REFERENCE NOTES

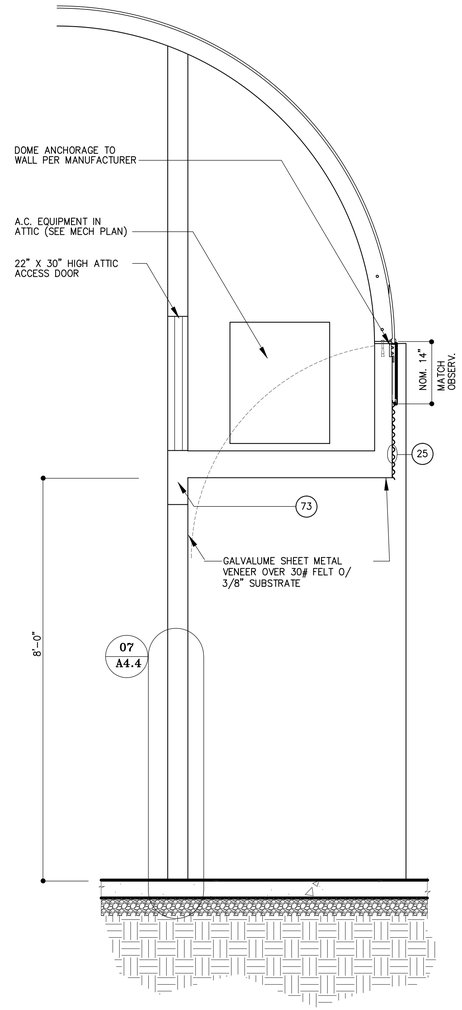

WALL SECTION 06

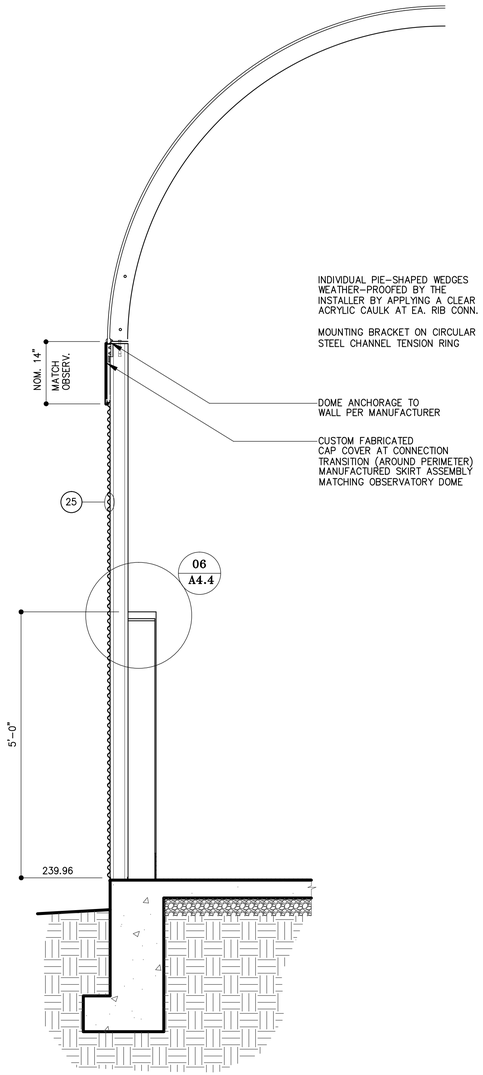

PEDESTALL SECTION 07

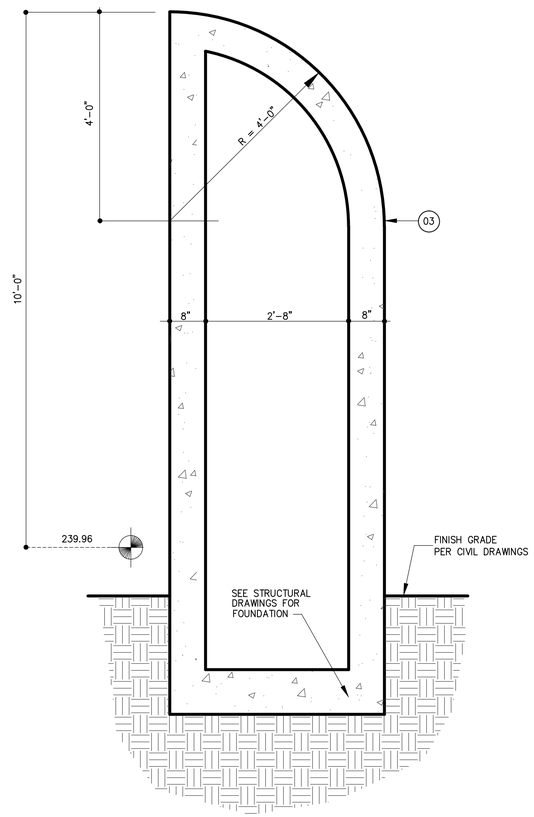

BOLLARD SECTION 08

SEE SHEET T3 FOR KEYED REFERENCE NOTES

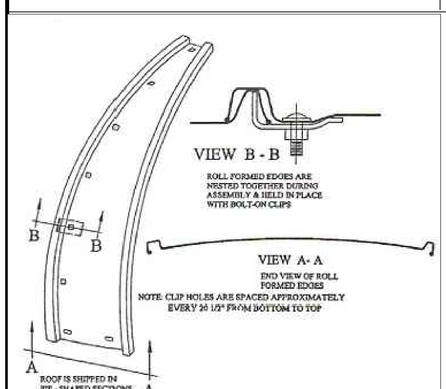

INDIVIDUAL PIE-SHAPED WEDGES WEATHER-PROOFED BY THE INSTALLER BY APPLYING A CLEAR ACRYLIC CAULK AT EA. RIB CONN.

MOUNTING BRACKET ON CIRCULAR STEEL CHANNEL TENSION RING

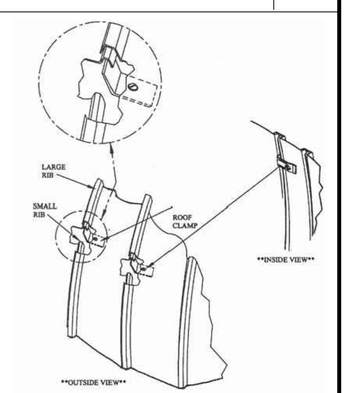

DOME ASSEMBLY ILLUSTRATED 07

DEMUTH MANUFACTURING OR EQUAL

Narkweather ARCHITECTS INC.
73 330 HWY 111, SUITE A / PALM DESERT, CA 92260-4016
PHONE: (760) 346-4090 / E-MAIL: info@narkweather.net

OWNERSHIP OF DOCUMENTS
DRAWINGS AND SPECIFICATIONS AS INSTRUMENTS OF SERVICE ARE AND SHALL REMAIN THE PROPERTY OF THE DESIGNER WHETHER THE PROJECT FOR WHICH THEY WERE PREPARED IS EXECUTED OR NOT. THEY ARE NOT TO BE USED ON OTHER PROJECTS OR EXTENSIONS TO THIS PROJECT EXCEPT BY AGREEMENT IN WRITING AND WITH APPROPRIATE COMPENSATION TO Narkweather Architects Inc.
COPYRIGHT 2016 Narkweather Architects

CITY OF RANCHO MIRAGE

PROJECT DESCRIPTION: OBSERVATORY
Rancho Mirage Public Library

SITE ADDRESS: 71-100 California 111, Rancho Mirage, CA 92270

SHEET CONTENT

WALL SECTIONS

DRAWING SCALE: 3/4" = 1'-0"

ISSUE DATE		
MONTH	DAY	YEAR
SEPT	29	2016

1	REVISION DATE:
2	REVISION DATE:
	REVISION DATE:
	REVISION DATE:
	REVISION DATE:

(PLAN CHECK ENGINEER STAMP)

RECOMMENDED FOR APPROVAL BY: LELAND E. COLE — DATE 9/27/16
R.C.E. 47159 EXP. 12/31/17

APPROVED BY CITY OF RANCHO MIRAGE: — DATE
WILLIAM A. EMOS, CITY ENGINEER
R.C.E. 43615 Exp. 6/30/2017

DRAWING NUMBER
A4.2
SHEET # 27 OF 56
PRIVATE REFERENCE #
CITY REFERENCE #

Bid Set - 10/07/2016

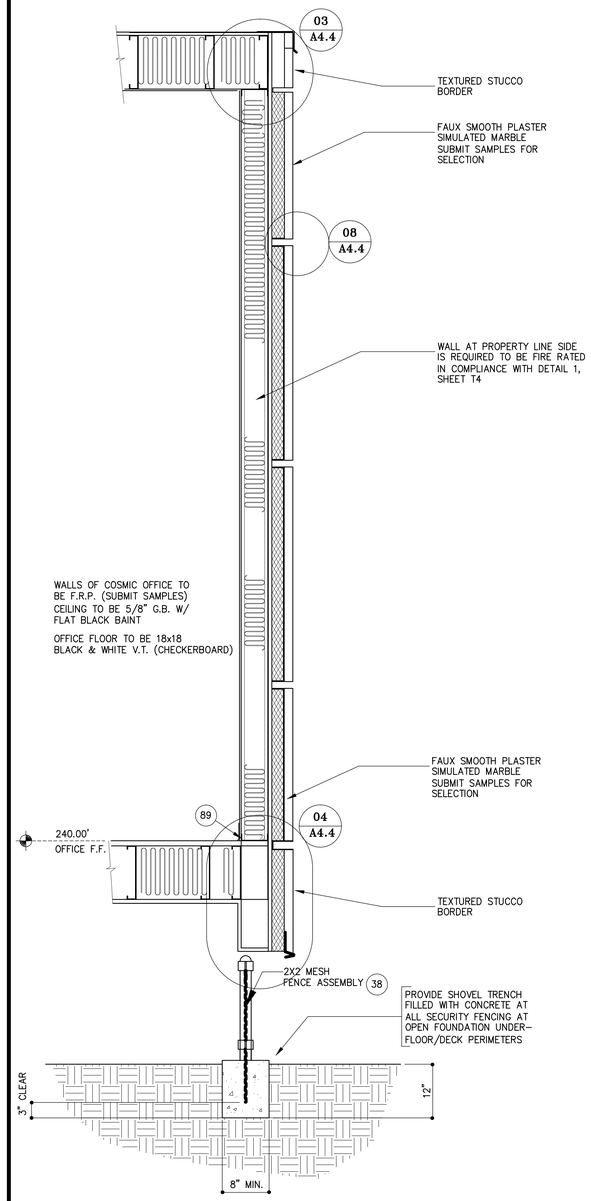

WALL SECTION 09

SEE SHEET T3 FOR KEYED REFERENCE NOTES

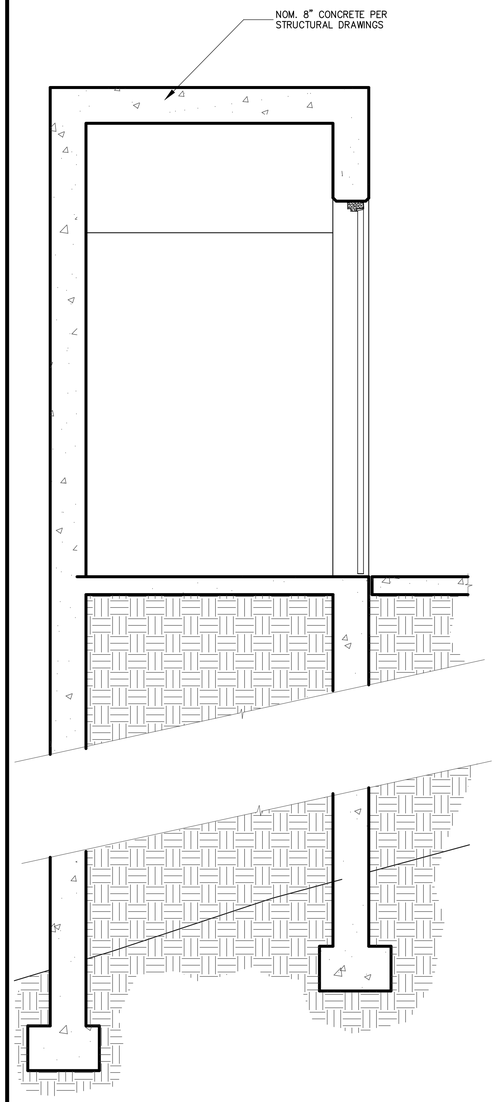

WALL SECTION 10

SEE SHEET T3 FOR KEYED REFERENCE NOTES

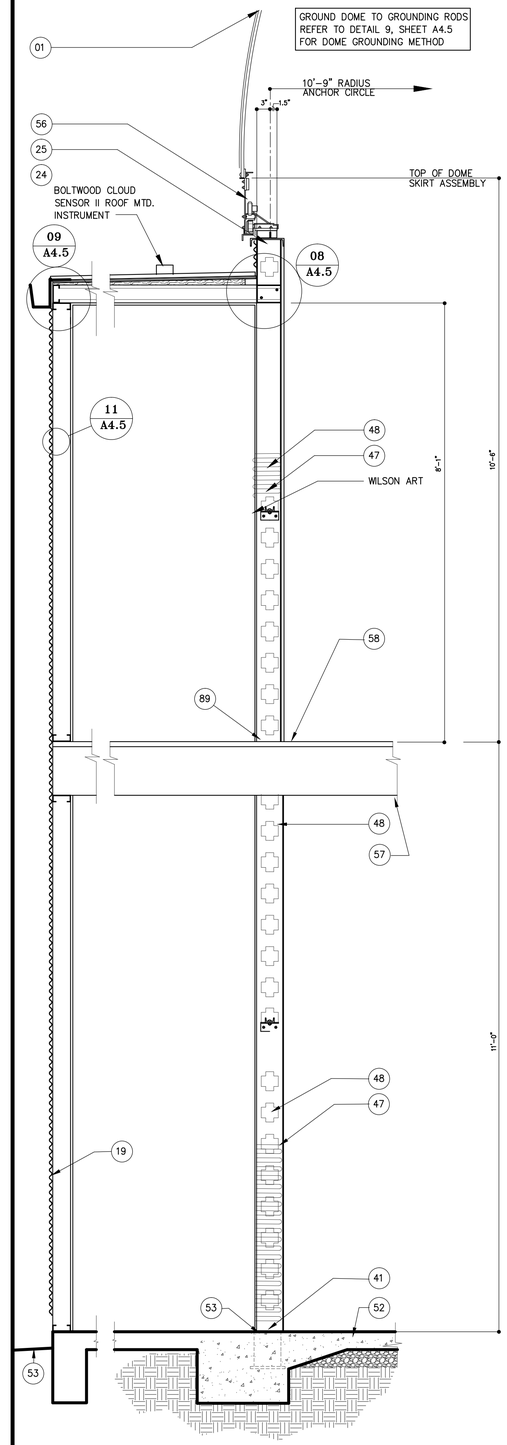

WALL SECTION 11

SEE SHEET T3 FOR KEYED REFERENCE NOTES

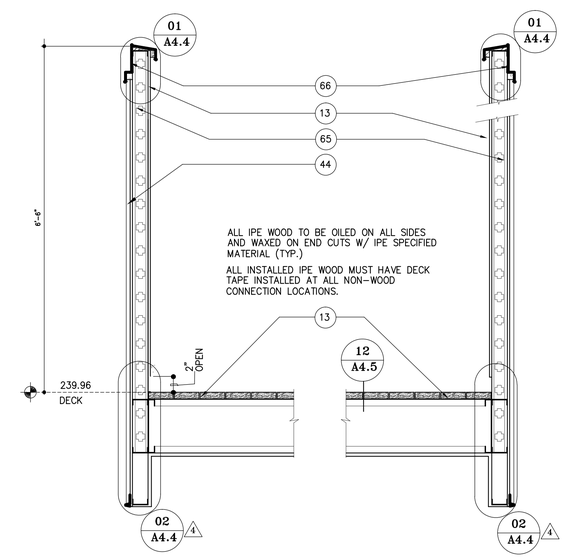

WALL SECTION 12

SEE SHEET T3 FOR KEYED REFERENCE NOTES

Narkweather ARCHITECTS INC.
73 330 HWY 111, SUITE A / PALM DESERT, CA 92260-4016
PHONE: (760) 346-4090 / E-MAIL: info@narkweather.net

OWNERSHIP OF DOCUMENTS
DRAWINGS AND SPECIFICATIONS AS INSTRUMENTS OF SERVICE ARE AND SHALL REMAIN THE PROPERTY OF THE DESIGNER WHETHER THE PROJECT FOR WHICH THEY WERE PREPARED IS EXECUTED OR NOT. THEY ARE NOT TO BE USED ON OTHER PROJECTS OR EXTENSIONS TO THIS PROJECT EXCEPT BY AGREEMENT IN WRITING AND WITH APPROPRIATE COMPENSATION TO Narkweather Architects Inc.
COPYRIGHT 2016 Narkweather Architects

CITY OF RANCHO MIRAGE

OBSERVATORY

PROJECT DESCRIPTION: Rancho Mirage Public Library

SITE ADDRESS: 71-100 California 111, Rancho Mirage, CA 92270

SHEET CONTENT

WALL SECTIONS

DRAWING SCALE: 3/4" = 1'-0"

ISSUE DATE		
MONTH	DAY	YEAR
SEPT	29	2016

1	REVISION DATE:
2	REVISION DATE:
3	REVISION DATE:
4	REVISION DATE:
	REVISION DATE:

(FOR CHECK ENGINEER STAMP)

RECOMMENDED FOR APPROVAL BY: LELAND E. COLE 9/27/16 DATE

R.C.E. 47159 EXP. 12/31/17

APPROVED BY CITY OF RANCHO MIRAGE: _____ DATE

WILLIAM A. ENOS, CITY ENGINEER R.C.E. 43913 Exp. 6/30/2017

DRAWING NUMBER

A4.3

SHEET # 28 OF 56

PRIVATE REFERENCE #

CITY REFERENCE #

Bid Set - 10/07/2016

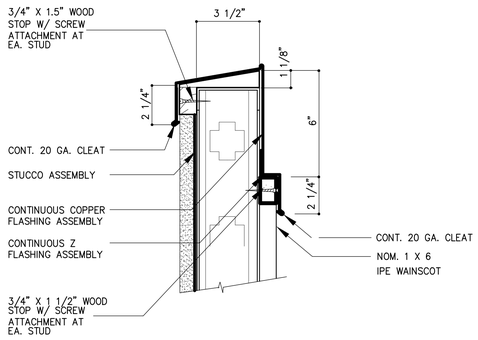

WALL TOP SECTION DETAIL 01

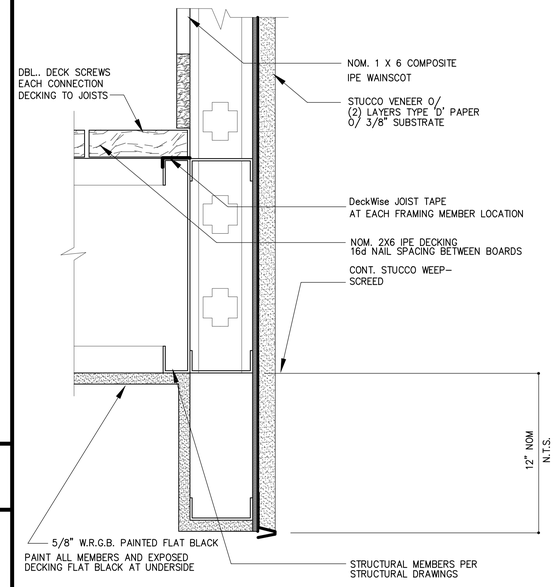

WALL BASE SECTION DETAIL 02

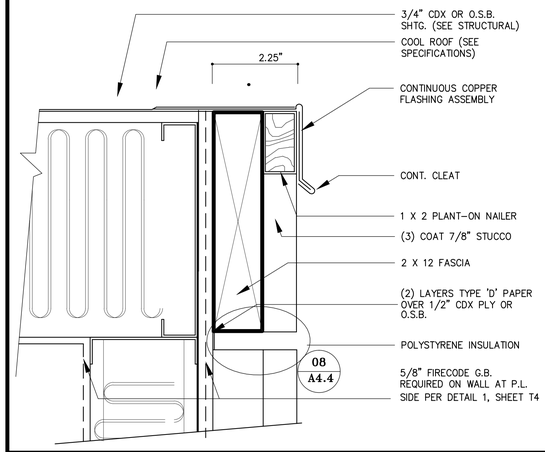

WALL AT ROOF SECTION DETAIL 03

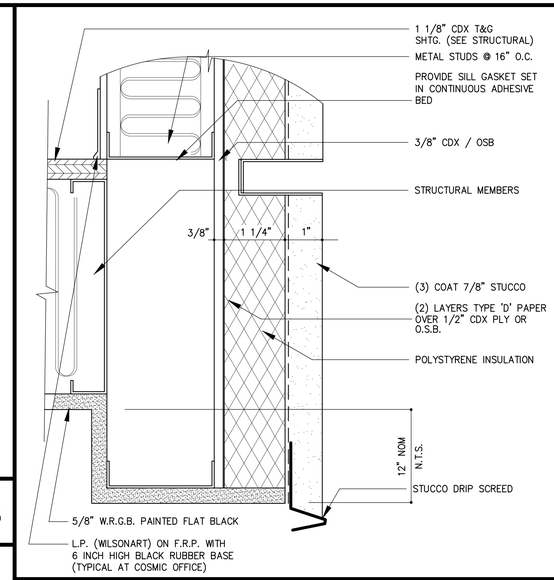

WALL BASE SECTION DETAIL 04

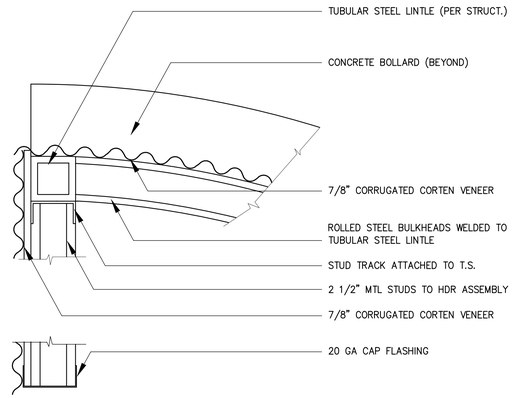

ROOF EDGE ASSEMBLY 05

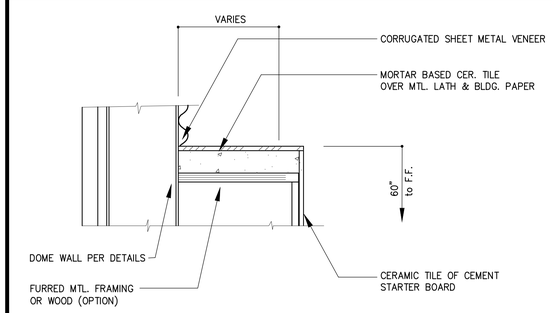

TILE LEDGE AT FURRED WALL 06

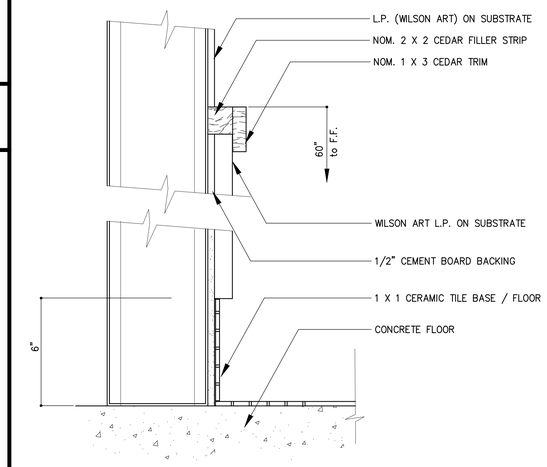

WALL WAINSCOT ASSEMBLY 07

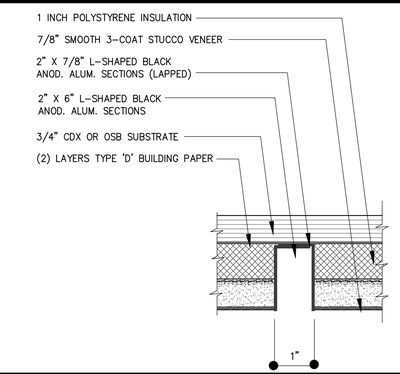

REVEAL ASSEMBLY 08

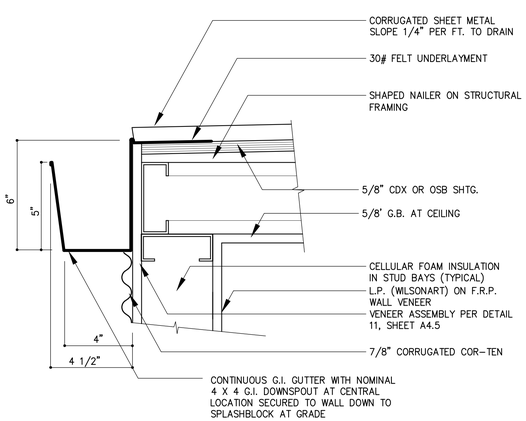

ROOF EDGE ASSEMBLY 09

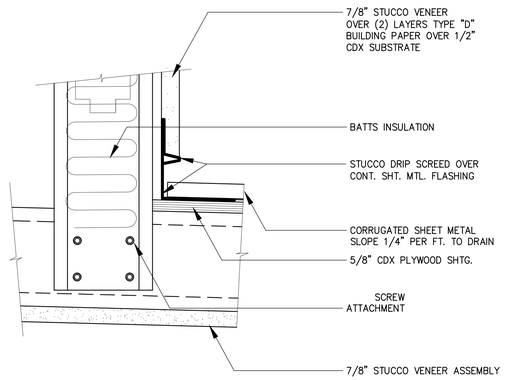

DOOR PROTECTION ROOF 10

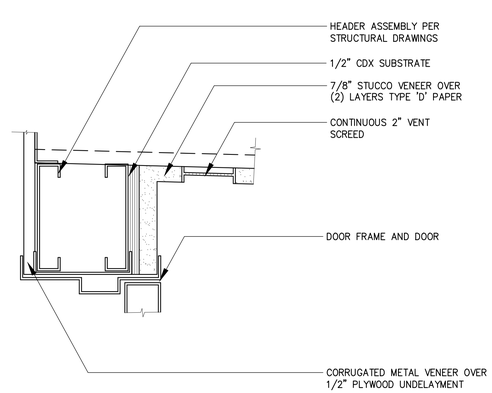

SOFFIT TO EXTERIOR DOOR WALL 11

Narkweather ARCHITECTS INC.
73 330 HWY 111, SUITE A / PALM DESERT, CA 92260-4016
PHONE: (760) 346-4090 / E-MAIL: info@narkweather.net

OWNERSHIP OF DOCUMENTS
DRAWINGS AND SPECIFICATIONS AS INSTRUMENTS OF SERVICE ARE, AND SHALL REMAIN THE PROPERTY OF THE DESIGNER WHETHER THE PROJECT FOR WHICH THEY WERE PREPARED IS EXECUTED OR NOT. THEY ARE NOT TO BE USED ON OTHER PROJECTS OR EXTENSIONS TO THIS PROJECT EXCEPT BY AGREEMENT IN WRITING AND WITH APPROPRIATE COMPENSATION TO Narkweather Architects Inc.
COPYRIGHT 2016 Narkweather Architects

CITY OF RANCHO MIRAGE
OBSERVATORY
PROJECT DESCRIPTION: Rancho Mirage Public Library
SITE ADDRESS: 71-100 California 111, Rancho Mirage, CA 92270

SHEET CONTENT
SECTION DETAILS

DRAWING SCALE: 3" = 1'-0"

ISSUE DATE		
MONTH	DAY	YEAR
SEPT.	29	2016

1	REVISION DATE:
2	REVISION DATE:
	REVISION DATE:
	REVISION DATE:
	REVISION DATE:

(PLAN CHECK ENGINEER STAMP)
RECOMMENDED FOR APPROVAL BY: LELAND E. COLE R.C.E. 47159 EXP. 12/31/17 — DATE 9/27/16
APPROVED BY CITY OF RANCHO MIRAGE: — DATE
WILLIAM A. ENDS, CITY ENGINEER R.C.E. 46916 EXP. 6/30/17

DRAWING NUMBER
A4.4
SHEET # 29 OF 56
PRIVATE REFERENCE #
CITY REFERENCE #

Bid Set - 10/07/2016

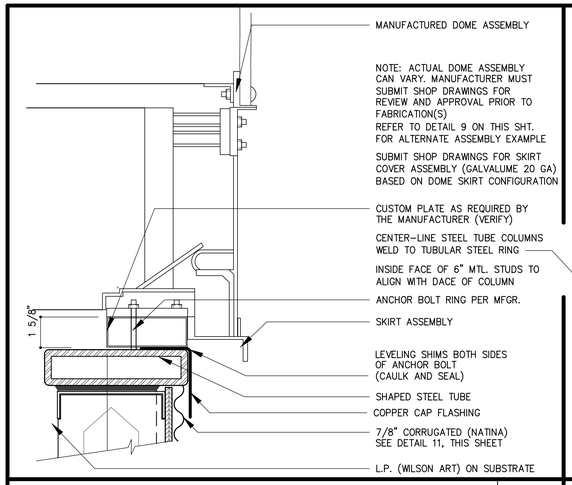

WALL TOP SECTION DETAIL 01

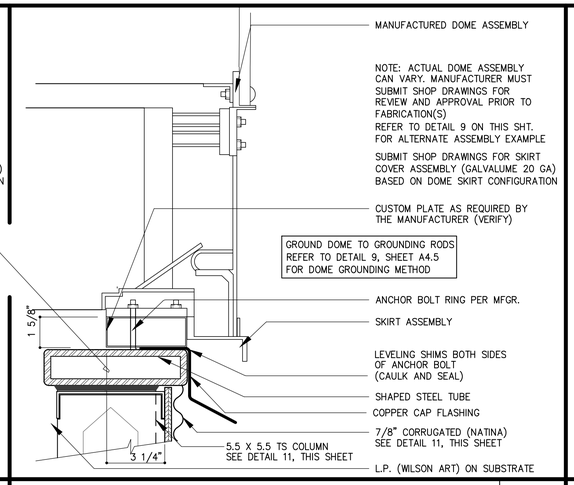

WALL TOP SECTION DETAIL 02

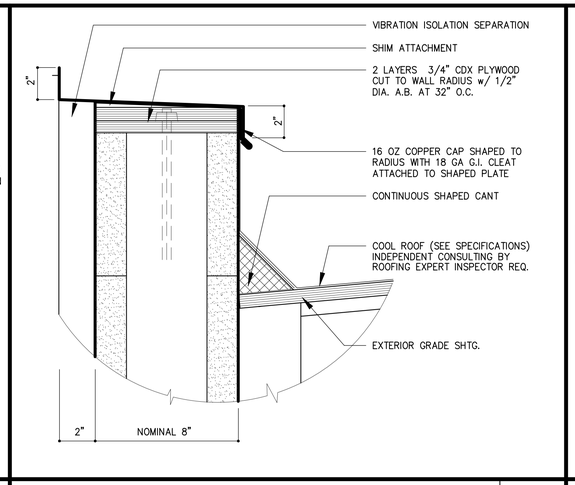

WALL AT ROOF SECTION DETAIL 03

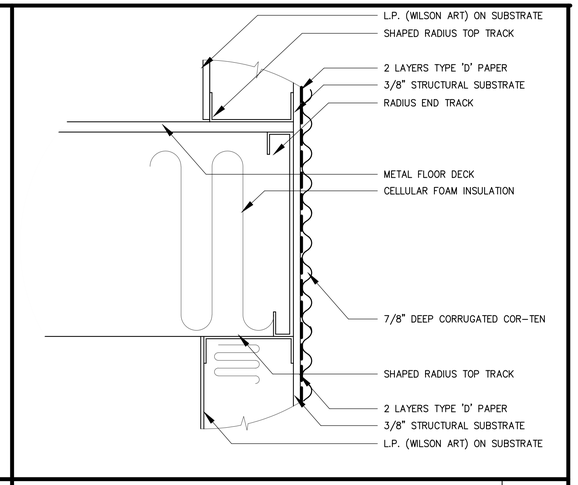

FLOOR TO WALL SECTION DETAIL 04

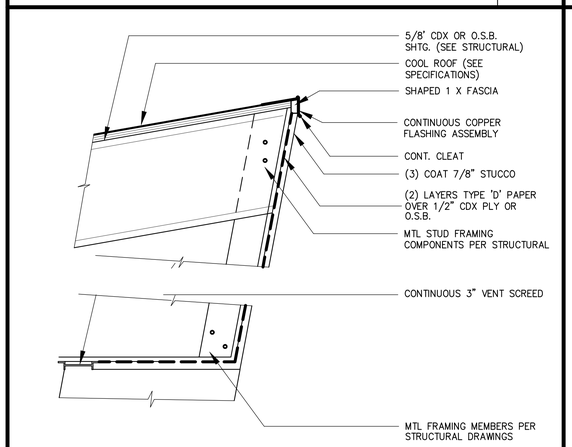

ROOF APEX SECTION 05
1-1/2" = 1'-0"

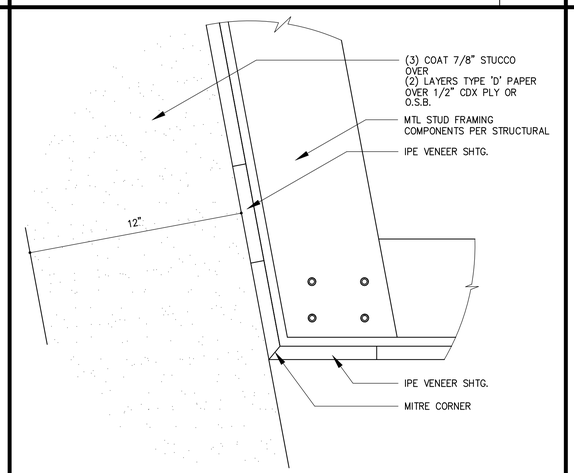

SOFFIT SECTION ASSEMBLY 06

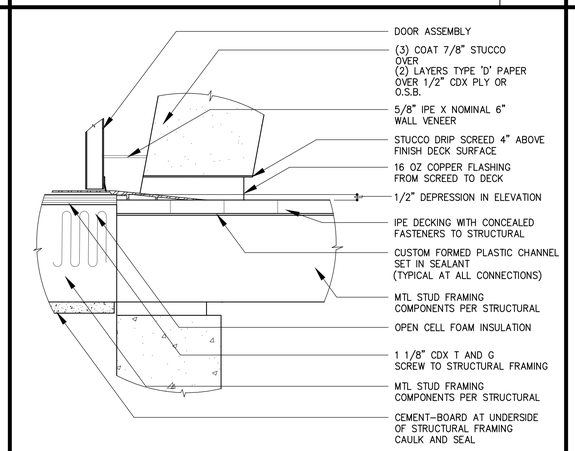

FLOOR TO DECK TRANSITION 07
1-1/2" = 1'-0"

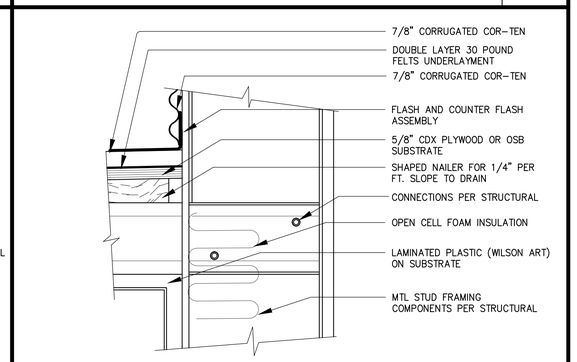

ROOF TO WALL CONNECTION 08

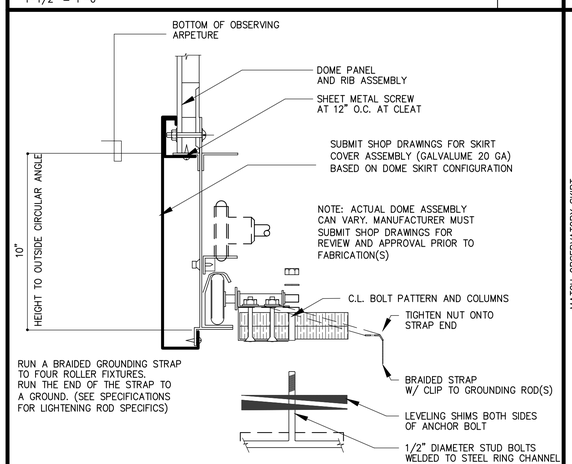

SKIRT ASSEMBLY W/COVER DOME GROUNDING INSTRUCTIONS 09

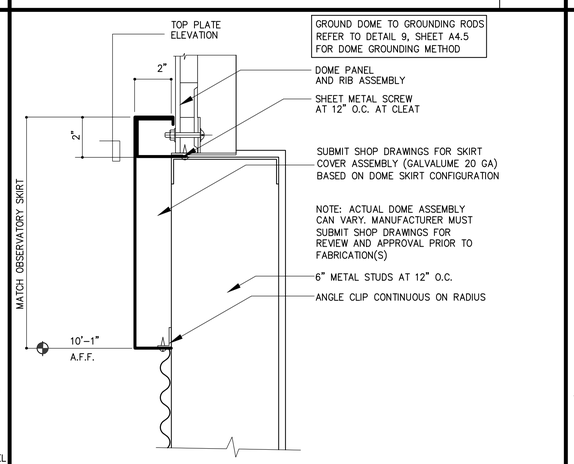

SKIRT ASSEMBLY AT TOILET 10

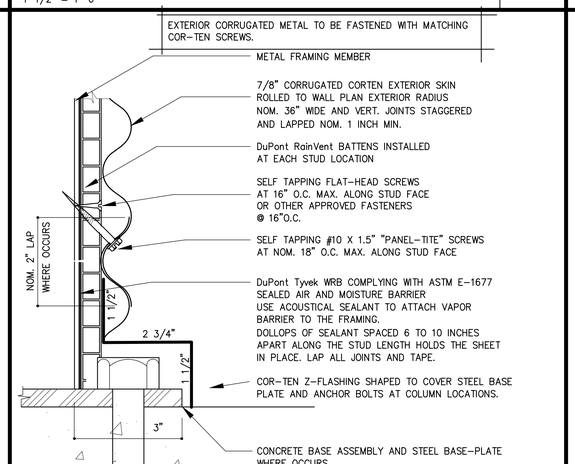

CORTEN STEEL WALL INSTALLED 11

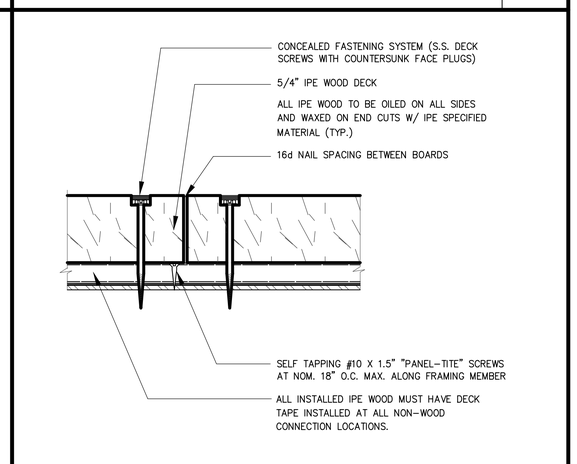

IPE INSTALATION DETAIL 12

Narkweather ARCHITECTS INC.
73 330 HWY 111, SUITE A / PALM DESERT, CA 92260-4016
PHONE: (760) 346-4090 / E-MAIL: info@narkweather.net

OWNERSHIP OF DOCUMENTS
DRAWINGS AND SPECIFICATIONS AS INSTRUMENTS OF SERVICE ARE AND SHALL REMAIN THE PROPERTY OF THE DESIGNER WHETHER THE PROJECT FOR WHICH THEY WERE PREPARED IS EXECUTED OR NOT. THEY ARE NOT TO BE USED ON OTHER PROJECTS OR EXTENSIONS TO THIS PROJECT EXCEPT BY AGREEMENT IN WRITING AND WITH APPROPRIATE COMPENSATION TO Narkweather Architects Inc.
COPYRIGHT 2016 Narkweather Architects

CITY OF RANCHO MIRAGE
OBSERVATORY
PROJECT DESCRIPTION: Rancho Mirage Public Library
SITE ADDRESS: 71-100 California 111, Rancho Mirage, CA 92270

SHEET CONTENT
SECTION DETAILS

DRAWING SCALE: 3" = 1'-0"

ISSUE DATE		
MONTH	DAY	YEAR
SEPT.	29	2016

1 REVISION DATE:
2 REVISION DATE:
REVISION DATE:
REVISION DATE:
REVISION DATE:

(PLAN CHECK ENGINEER STAMP)
RECOMMENDED FOR APPROVAL BY: LELAND E. COLE, RCE# 47159, EXP: 12/31/17 — DATE 9/27/16
APPROVED BY CITY OF RANCHO MIRAGE: WILLIAM S. DICK, CITY ENGINEER, R.C.E. 36911, EXP. 6/30/2017 — DATE

DRAWING NUMBER
A4.5
SHEET # 30 OF 56
PRIVATE REFERENCE #
CITY REFERENCE #

Bid Set - 10/07/2016

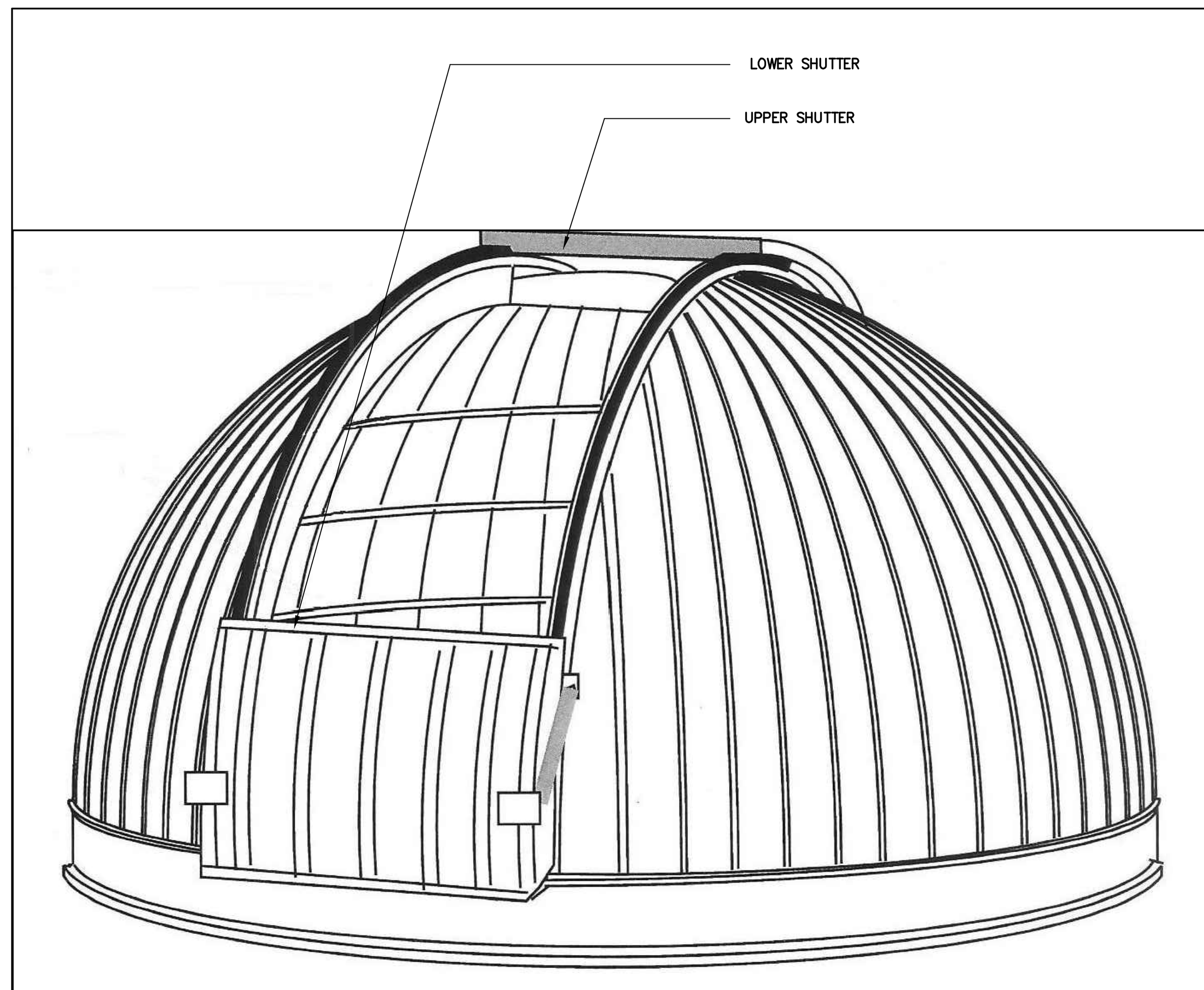

MANUFACTURED DOME ISOMETRIC
SCALE: N.T.S.

01

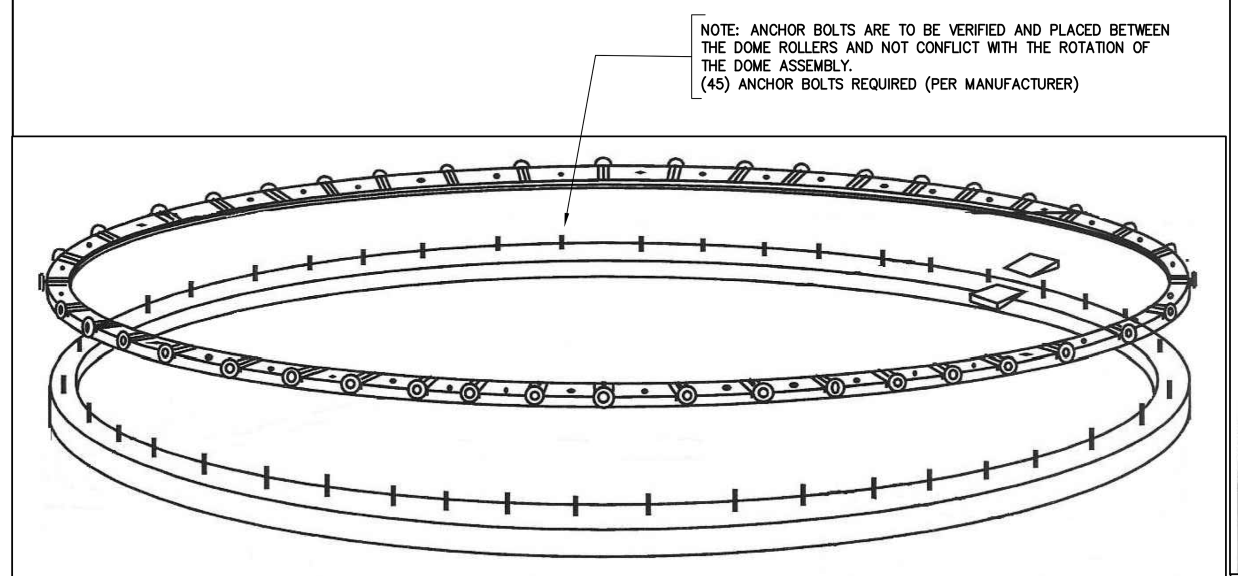

DOME RING ISOMETRIC
SCALE: N.T.S.

02

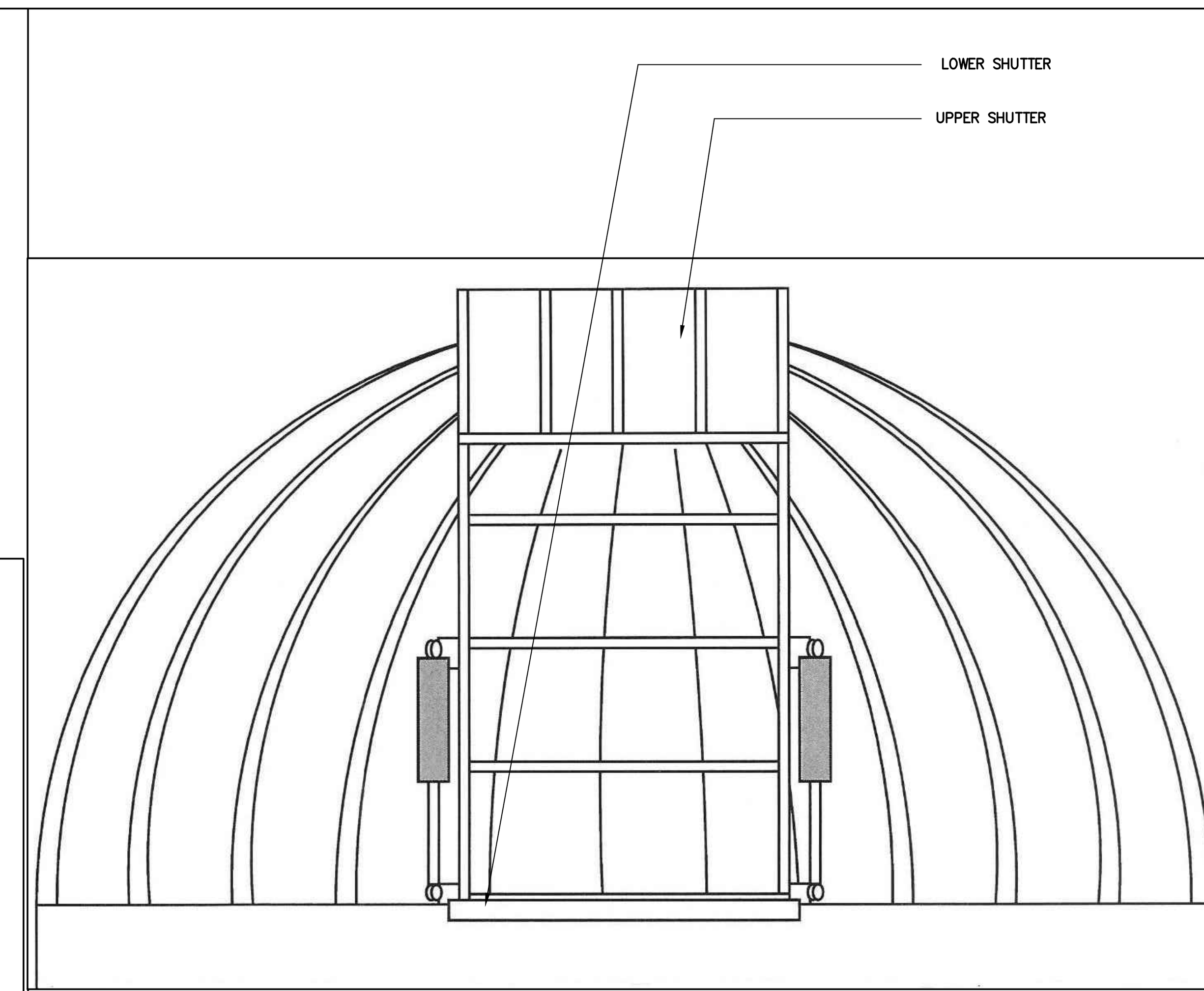

DOME ELEVATION
SCALE: N.T.S.

03

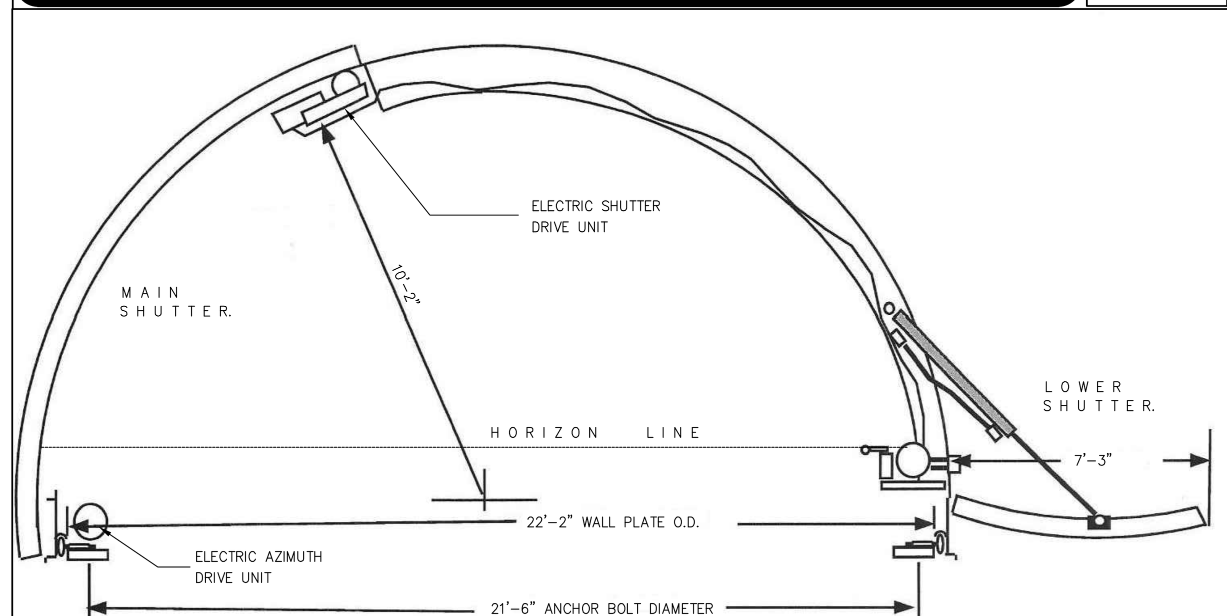

NOTE: LOWER AND UPPER SHUTTERS OPEN

DOME DIAMETER:	22'-6"
OUTSIDE WALL PLATE DIAMETER:	22'-2"
ANCHOR BOLT RING DIAMETER:	21'-6"
CLOSEST OBSTRUCTION:	10'-2"
OUTSIDE CLEARANCE MINIMUM:	7'-3"
APETURE WIDTH:	71"

NOTE: LOWER AND UPPER SHUTTERS OPEN

DOME SECTION
SCALE: N.T.S.

05

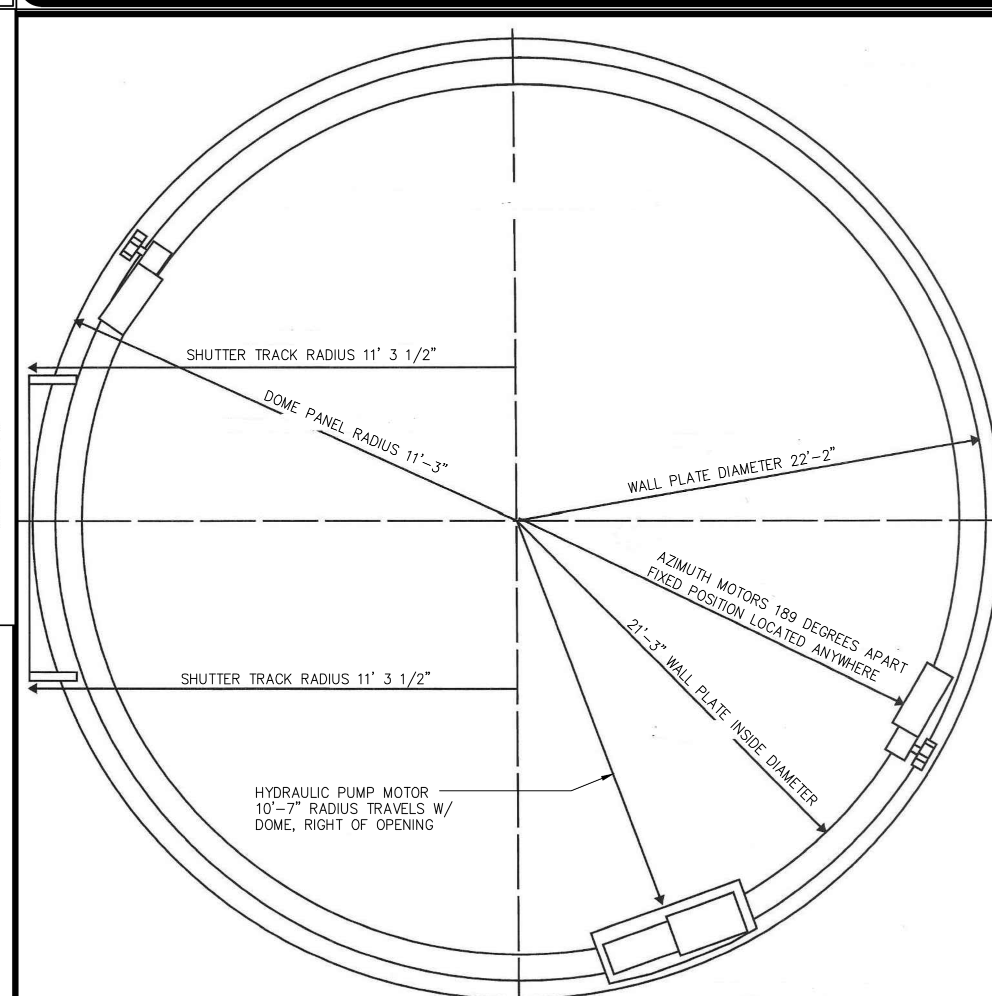

DOME PLAN
SCALE: N.T.S.

06

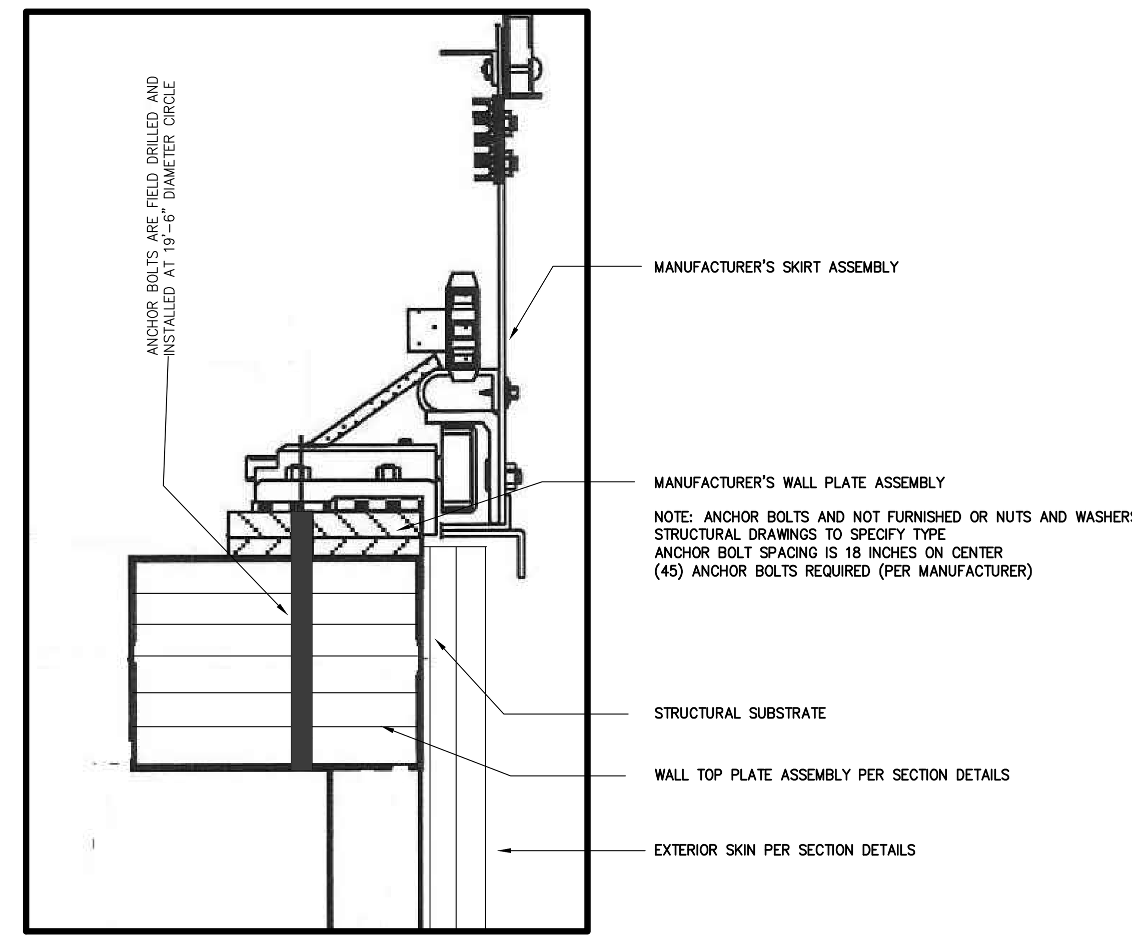

DOME TO WALL CONNECTION
SCALE: N.T.S.

07

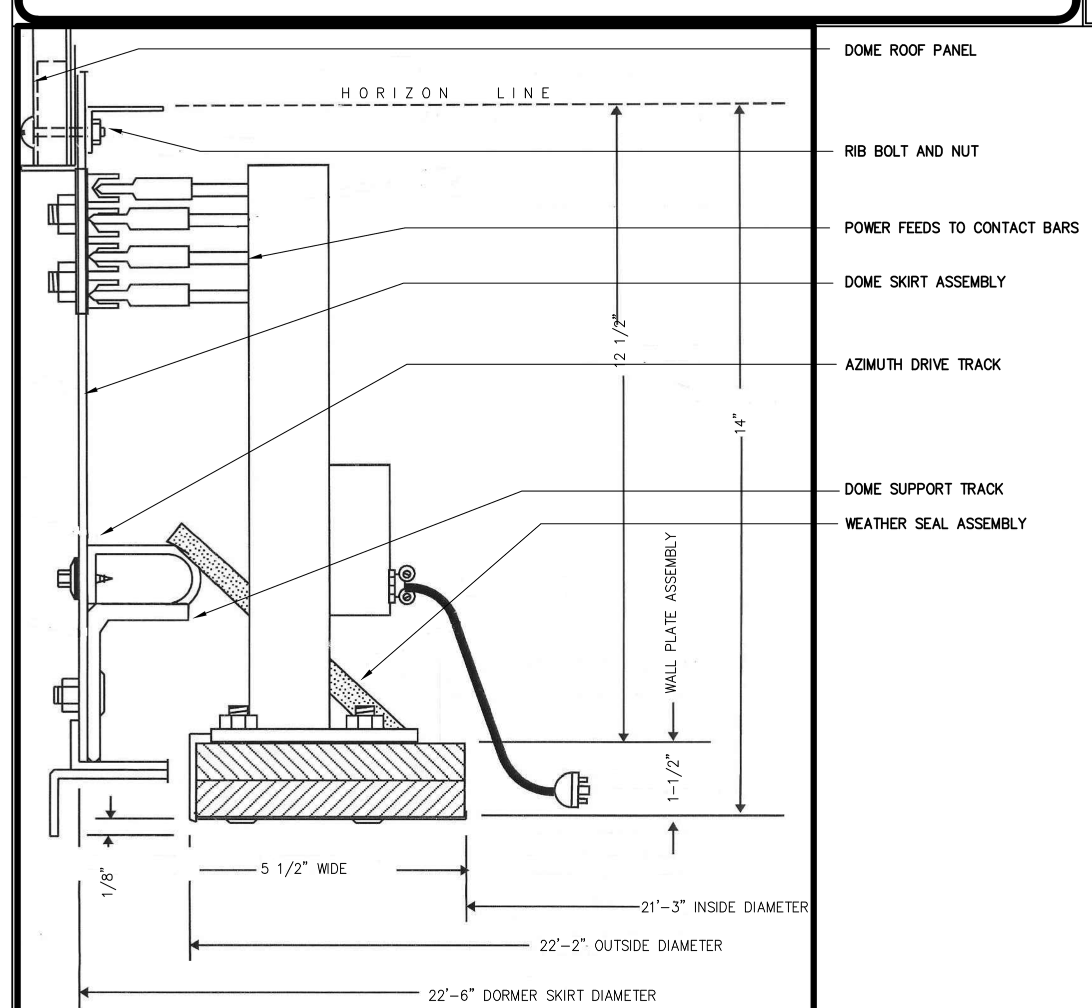

DOME TRACK ASSEMBLY DETAIL
SCALE: N.T.S.

09

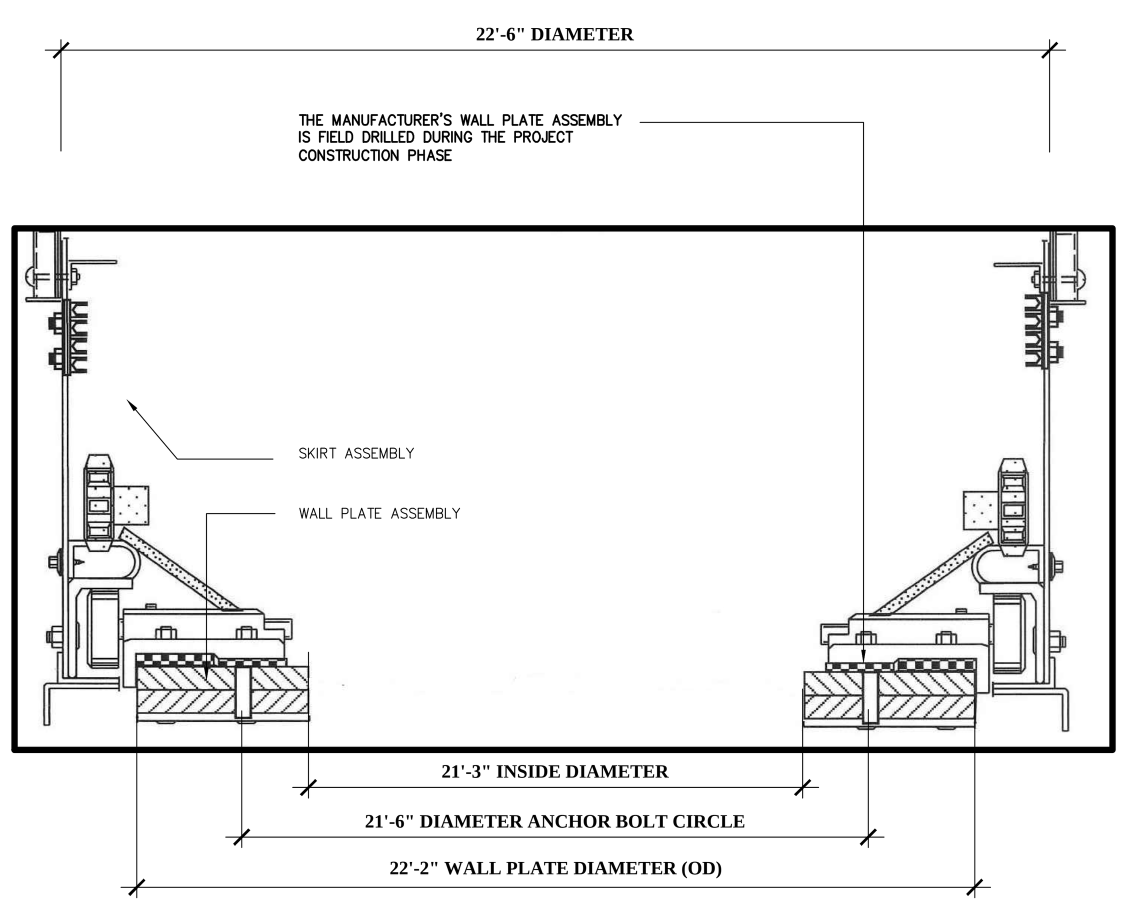

DOME BASE ASSEMBLY SECTION
SCALE: N.T.S.

10

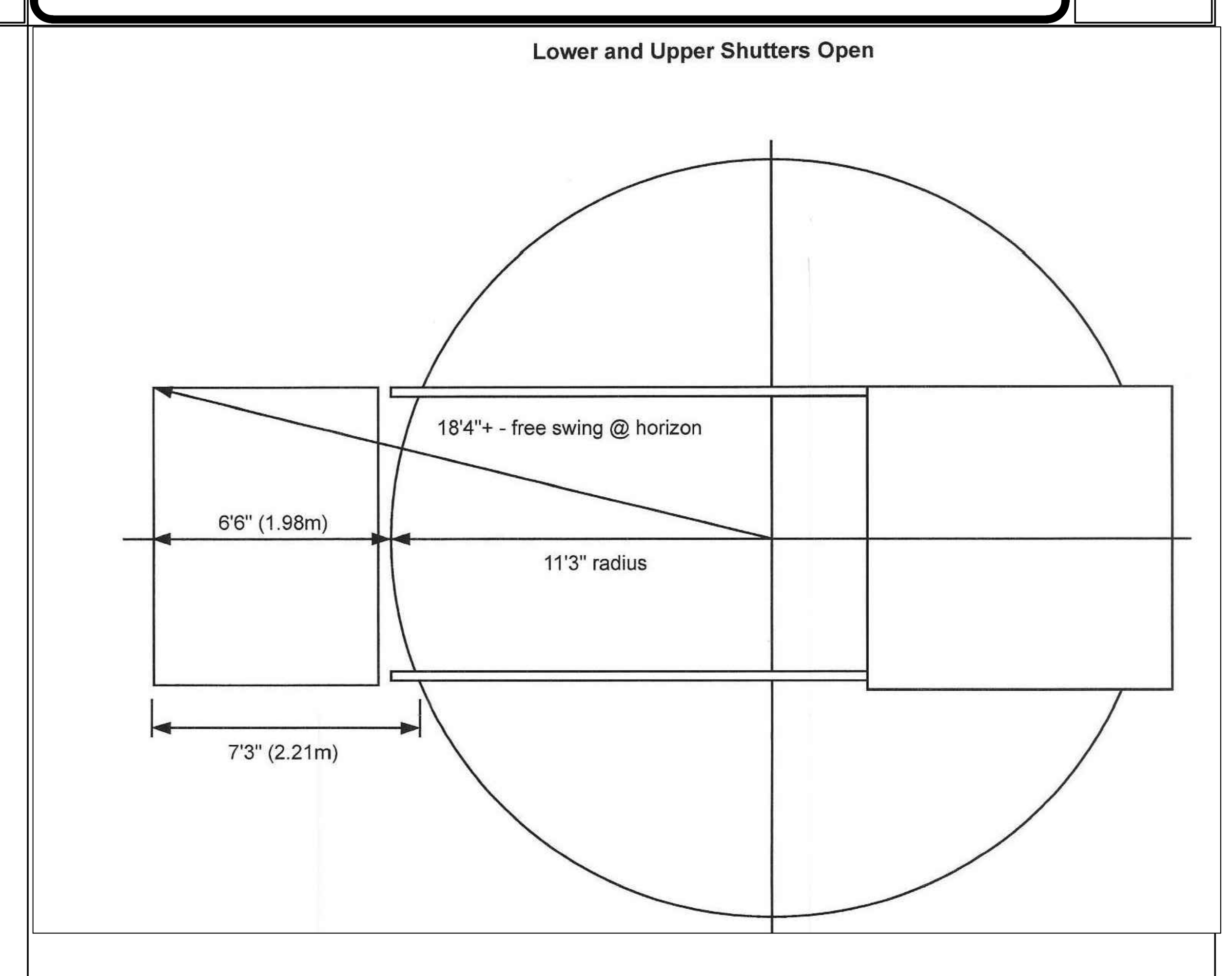

DOME SHUTTER CONFIGURATIONS
SCALE: N.T.S.

11

ASH-DOME Model 'M' General Specifications **2015**

Submittals: Brochure, standard Model 'M' drawings M 100 – M 109. If felt necessary a general assembly instruction packet can be furnished early for your review. Operating instructions, Electrical Data and Maintenance Information are included with the shipment. All information can be mailed in advance upon request.

Dome Wall Plate Assembly (Roller Base Plate): Minimum 1-1/2" thick X 5-1/2" wide, solid core MDO plywood, sealed with exterior grade paint and encircled with a14GA (.0747) galvanized steel low carbon commercial quality, G 90, Minimum Spangle, Extra Smooth, steel ring. The plate is made up of interlocking sections.

MDO Plywood: This product is manufactured with a high quality paper saturated with phenolic resin solids and overlaid on exterior grade plywood panels. It is a selected hardwood veneer overlay. It is free of patches, providing a smooth surface. MDO plywood is manufactured with waterproof resins that meet or exceed all veneer-grade, adhesion, and construction requirements of PS1-83.

Note: A means of directly fastening this wall plate to a support curb is required. The wall plate must be set and secured in a level plane. Galvanized steel leveling shims are provided with the dome for this purpose.

Anchor Bolts: Anchor bolts; nuts or washers are not furnished. The anchor bolt placement is shown on our standard drawings. The Ash-Dome, Wall Plate Assembly is drilled on the job site at the time of the assembly. It is possible to drill the Ash-Dome wall plate and set the anchors at that time.

Dome Rollers Model 'M': Heavy Duty, self-aligning, sealed ball bearings with a 2-3/4" diameter tire. These rollers are mounted on machined castings equally spaced at a maximum of 20" around the circumference of the wall plate assembly. This distributes the load around the outside edge of the support wall.

Roller Mountings Model 'M': Machined Almag castings.

Roller Isolation: Fixtures are isolated from the wall plate assembly by Isomode Pads, 60+/- 5 Durometer, Black Color, nominal static deflection. Effectively, minimizing vibration to the roof structure and adjacent areas.

Shutter Rollers Model 'M': Heavy Duty sealed bearings with galvanized tires, 1-3/4" diameter rollers are spaced so the weight of the shutter is distributed across the length of the shutter tracks. Bearings are rated for 10 years.

Dome Track Model 'M': The 'M' dome is carried on 1/4" roll formed angles that are made to form a continuous round ring. The joints in this ring must be welded on the job site. These angles are undercoated with a cold zinc primer and coated with a rust inhibitor.

Dome Skirt: 14 GA (.0747) Galvanized Steel, low carbon, commercial quality, galvanized G-90, Grade B or equal, Minimum Spangle, Extra Smooth Surface, oiled - conforms to ASTM Specification A-569. This skirt is bolted to the dome track using stainless fasteners. The fasteners are spaced evenly around the circumference of the skirt.

Roof Sheets: 26 GA (.022-.026) Galvalume, CHEM treated, oil lite, minimum spangle. Segments are 16" wide at the base, taper toward top, a stiffening flange is roll formed on each edge, forming a weatherproof seam when combined with the rib sections.

Galvalume: This is a corrosion resistant steel sheet, continuously hot dipped coated with an aluminum zinc alloy. For certain applications it offers a substantial increase in corrosion resistance over G 90 galvanized sheet. It can be readily formed, welded or soldered. Conforms to ASTM A-792 A-792 AZ 50 coating.

Rib Sections: Stiffening ribs, 26 GA (.022-.026) Galvalume, CHEM treated, oil lite, minimum spangle, ASTM A-792 AZ 50 coating (Two segments are roll formed, fastened together forming a channel rolled with a radius. These segments are riveted approx. every 12" forming an interlocking cross section.)

Note: Each Roof Panel & Rib Section is secured on the outside of the dome skirt. This prevents water from entering the dome roof structure, as all interlocking seams are on the outside of the dome skirt.

Fasteners: Typically all fasteners on the dome are 18 - 8 Series - stainless steel; satisfies all requirements of the ASAB 182 -1960; MS 35308 or MS 35311.

Framing: 14 GA (.0747) galvanized steel, G-90, Commercial Quality, Grade B or equal, roll formed, additional reinforcing is provided where extra wind or snow loading may occur.

Caulking Compound: Perm-E-Lastic GLAZING COMPOUND is used along the viewing aperture framing. This provides a continuous bead of sealant along each side of the aperture.

Shutter Track: 12 GA (.1046) galvanized steel, G-90, Commercial Quality, Grade B, Minimum Spangle, Extra Smooth, roll formed, Conforms to ASTM A 569

ASH-DOME Model 'M' General Specifications **2015**

Shutter Sections: The standard Type 'B' is a two-section style with the lower short door section designed to hinge forward level with the Horizon. This provides the observer an unobstructed clear viewing aperture from Horizon to approx. 105 degrees at any one time.

Note: The lower door section is hydraulically operated on Model 'M' Ash-Dome units.

Shutter Motor 'M': An inline gear reducer and a fixed speed motor with reversing capability. 1/2 hp, 220/230 V, 50/60 cycles, 1 ph, CSA Certified: 42492. Limit switches shutoff the shutter drive motor when the shutter reaches the extreme open or close positions. All main shutter sections are driven with electric motors. This is a positive rack and gear device. A positive disconnect between the motor switch and power is furnished.

Azimuth Drive 'M': Two fixed speed motors, 220 / 230V, 50 / 60 cycles, 1ph, 1/3hp. The motors are across from each other on the wall plate assembly. These should be located close to house power.

Note: All electrical motor data is furnished with the observatory dome unit. The motors are guaranteed for a period of one year after the completion of the observatory dome on the job site.

Electrical: It is recommended the Ash-Dome Electrical System be on a designated ground fault circuit. This system should be connected to a UL approved ground fault outlet or a UL approved ground fault breaker should be provided. All the electrical equipment and operations are thoroughly tested during the fabrication and after assembly of the observatory dome unit. Any state, local building codes, or finish electrical requirements must be preformed by a local electrical contractor after the reassembly on the job site and is the responsibility of the local contractor. The Ash Manufacturing Company will not be responsible for connecting into any computer or automated system.

Motor Control: Unless otherwise specified, all electric motors are controlled with UL listed NEMA type switches.

Weather Seals: Weather stripping, black color (contact adhesive is used to secure weather seal along viewing aperture). All necessary clearances are sealed with a sponge type neoprene weather seal. This effectively keeps out severe amounts of rain, dust and snow.

Testing: The finished Ash-Dome is completely fabricated and tested in accordance with the Ash Manufacturing Company's thorough testing procedures.

Unit Installation: The Model M Ash-Dome must be installed with the supervision of Ash Mfg. Co. supervisors.

Delivery: The disassembled observatory dome unit will be shipped in such a way as to insure all materials will arrive in satisfactory condition. Upon arrival on the job site it is recommended the shipment be kept above ground and dry, free from concrete dust and other abrasive materials.

Questions Call: 815 436 9403

DOME GENERAL SPECIFICATIONS
SCALE: N.T.S.

12

Narkweather ARCHITECTS INC.
73 330 HWY 111, SUITE A / PALM DESERT, CA 92260-4016
PHONE: (760) 346-4090 / E-MAIL: info@narkweather.net

OWNERSHIP OF DOCUMENTS
DRAWINGS AND SPECIFICATIONS AS INSTRUMENTS OF SERVICE ARE AND SHALL REMAIN THE PROPERTY OF THE DESIGNER WHETHER THE PROJECT FOR WHICH THEY WERE PREPARED IS EXECUTED OR NOT. THEY ARE NOT TO BE USED ON OTHER PROJECTS OR EXTENSIONS TO THIS PROJECT EXCEPT BY AGREEMENT IN WRITING AND WITH APPROPRIATE COMPENSATION TO Narkweather Architects Inc.
COPYRIGHT 2016 Narkweather Architects

CITY OF RANCHO MIRAGE

PROJECT DESCRIPTION: OBSERVATORY
Rancho Mirage Public Library

SITE ADDRESS: 71-100 California 111, Rancho Mirage, CA 92270

SHEET CONTENT
WALL SECTIONS

DRAWING SCALE:
3/4" = 1'-0"

ISSUE DATE

MONTH	DAY	YEAR
SEPT	29	2016

1 REVISION DATE:
2 REVISION DATE:
3 REVISION DATE:
4 REVISION DATE:
REVISION DATE:

(PLAN CHECK ENGINEER STAMP)
RECOMMENDED FOR APPROVAL BY:
LELAND E. COLE 9/27/16 DATE
R.C.E. 47159 EXP. 12/31/17
APPROVED BY CITY OF RANCHO MIRAGE:
WILLIAM A. ENOS, CITY ENGINEER
R.C.E. 43910, EXP. 6/30/2017
DATE

DRAWING NUMBER
A5.1
SHEET # 31 OF 56
PRIVATE REFERENCE #
CITY REFERENCE #

Bid Set - 10/07/2016

NOTE: ROUTE ROOF DRAIN AND OVERFLOW PIPING TO EXTERIOR WALL OR COLUMN AND DAYLIGHT AT NEAREST CURBFACE

CUTTING THE HOLE: CUT, CORE-DRILL OR FORM-OUT A SQUARE HOLE WHERE THE DRAIN IS TO BE INSTALLED. CUT, CORE-DRILL OR FORM-OUT AN ADDITIONAL AREA MAKING ALLOWANCE FOR THE OVERFLOW PIPING. CUT TOP OF OVERFLOW CAPPING UPON COMPLETION OF INSTALLATION. SOLVENT CEMENT ABS PIPING THROUGH THE OVERFLOW

INSTALLATION NOTES: PLACE THE MOPPED BASE SHEET UP TO AND ON THE FEATHERED EDGE OF THE DRAIN SKIRT. APPLY OTHER LAY-UPS DIRECTLY TO THE SKIRT USING B.U.R. AT 400° TO 500° F. THE PLIES AND CAP SHEETS SHOULD COVER AS MUCH OF THE DRAIN SKIRT FLASHING AREA AS POSSIBLE WITHOUT COVERING ANY PORTION OF THE DRAIN GRATE (LEAVE PROTECTIVE CARDBOARD COVER ON GRATE DURING INSTALLATION AND REMOVE UPON COMPLETION). USE STANDARD ROOFING PRACTICE DURING LAY-UP APPLICATION. BASE SHEET MAY GO UNDER OR OVER THE SKIRT; IN EITHER CASE THEY MUST BE HOT-MOPPED. SCREW DRAINS TO PLYWOOD DECK USING NO. 8x3/4" GALV. COUNTERSUNK WOOD SCREWS. SECURE GRATE TO DRAIN BODY WITH SCREWS PROVIDED BY MFR.

SPECIFICATION: FURNISH AND INSTALL A COMBINATION ROOF DRAIN, OVERFLOW AND FLASHING AREA AS ONE UNIT MADE OF HIGH-IMPACT ABS OR PVC PLASTIC, MANUFACTURED BY TECH SPECIALTIES OR APP'D EQUAL

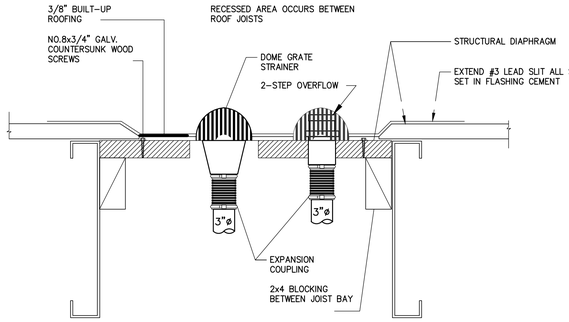

ROOF DRAIN INSTALLATION DETAIL 01
SCALE: N.T.S.

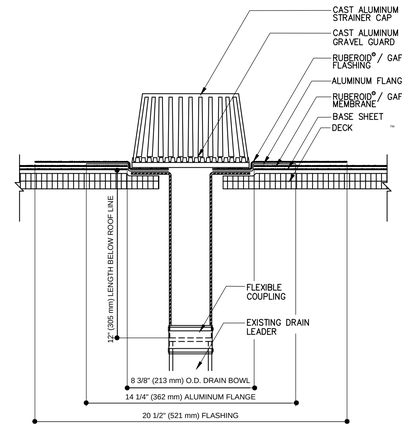

ROOF DRAIN FLASHING DETAIL 02
SCALE: N.T.S.

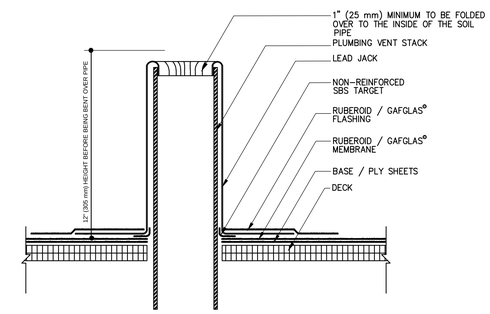

M-WELD LEAD FLASHING DTL. 03
SCALE: N.T.S.

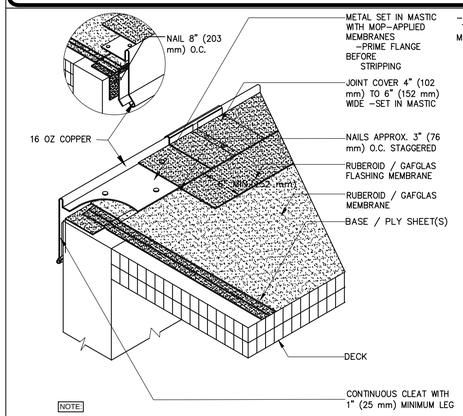

NOTE:
1. BASE/PLY SHEET(S) TURNED OVER EDGE A MINIMUM OF 1 1/2" (38 mm) OR THICKNESS OF NAILER, WHICHEVER IS GREATER, OR A SEPARATION MEMBRANE SHEET IS INSTALLED AS SHOWN.
2. THIS DETAIL SHOULD BE USED ONLY WHERE WATER DRAINS AWAY FROM EDGE.
3. PRIME BOTH SIDES OF FLANGE AND SET IT IN ROOF CEMENT ON MOP MB, COLD MB SA, MB AND BUR. SET PRIMED FLANGE IN HEAT-SOFTENED MEMBRANE ON TORCH APP AND HEAT-WELD SBS SYSTEMS.

FLAT EDGE FLASHING DETAIL 04
SCALE: N.T.S.

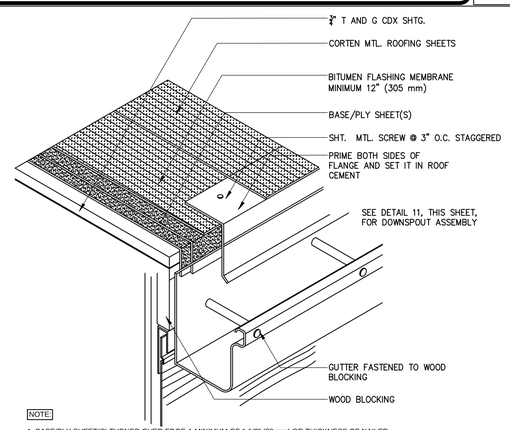

NOTE:
1. BASE/PLY SHEET(S) TURNED OVER EDGE A MINIMUM OF 1 1/2" (38 mm) OR THICKNESS OF NAILER, WHICHEVER IS GREATER.
2. FOR DRAINAGE OVER EDGE, USE METAL WITHOUT GRAVEL STOP LIP.

PERIMETER GUTTER DETAIL 05
SCALE: N.T.S.

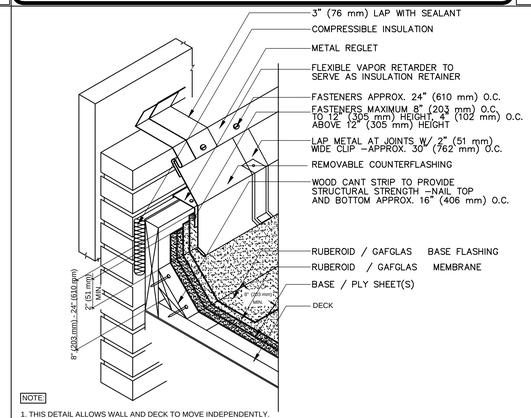

NOTE:
1. THIS DETAIL ALLOWS WALL AND DECK TO MOVE INDEPENDENTLY.
2. THIS DETAIL SHOULD BE USED WHERE THERE IS ANY POSSIBILITY THAT DIFFERENTIAL MOVEMENT WILL OCCUR BETWEEN THE DECK AND A VERTICAL SURFACE, SUCH AS AT A PENTHOUSE WALL. THE VERTICAL WOOD MEMBER SHOULD BE FASTENED TO THE DECK ONLY. THIS IS ONE SATISFACTORY METHOD OF JOINING THE TWO-PIECE FLASHING SYSTEM. OTHER METHODS MAY BE USED.
3. COUNTERFLASHING MUST EXTEND AT LEAST 4" (102 mm) BELOW THE TOP EDGE OF THE BASE FLASHING AND 2" (76 mm) BELOW BASE FLASHING FASTENERS.

BASE FLASHING FOR DBL WALL 06
SCALE: N.T.S.

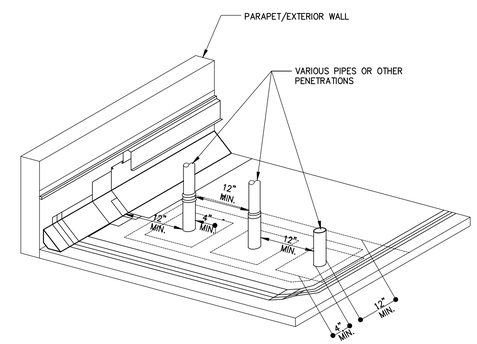

PENETRATION CLEARANCES REQ. 07
SCALE:

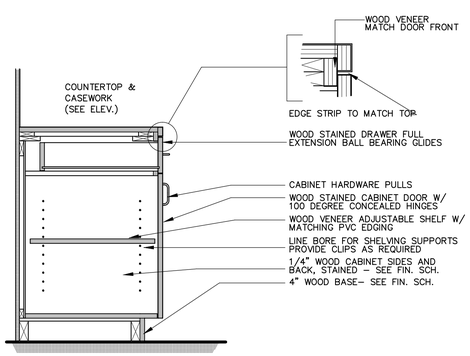

BASE CABINET CONSTRUCTION 08
SCALE: N.T.S.

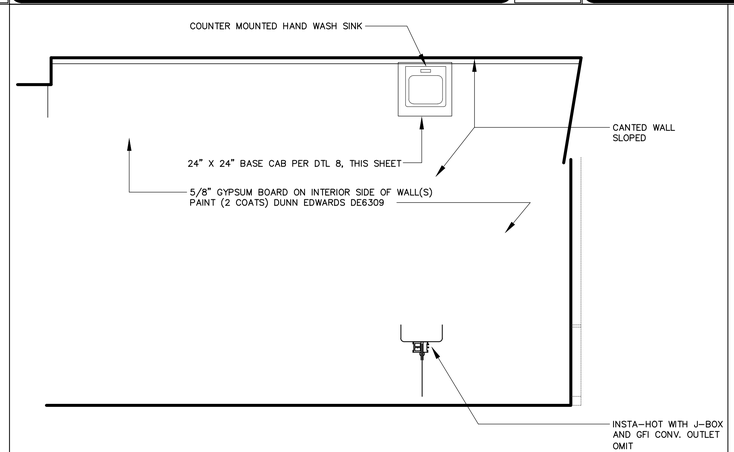

CASEWORK (COSMIC OFFICE) 09
SCALE: 3/8" = 1'-0"

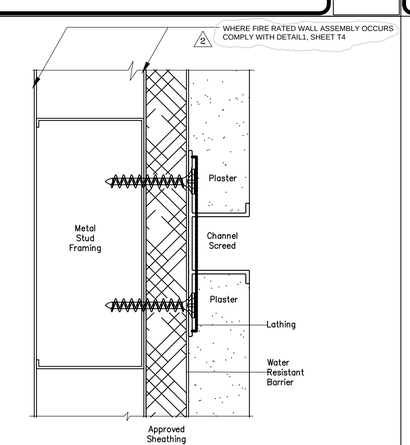

STUCCO REVEAL 10

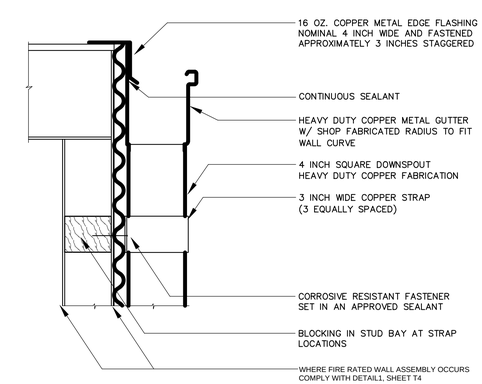

GUTTER / D.S. SECTION 11

Narkweather ARCHITECTS INC.
73 330 HWY 111, SUITE A / PALM DESERT, CA 92260-4016
PHONE: (760) 346-4090 / E-MAIL: info@narkweather.net

OWNERSHIP OF DOCUMENTS
DRAWINGS AND SPECIFICATIONS AS INSTRUMENTS OF SERVICE ARE AND SHALL REMAIN THE PROPERTY OF THE DESIGNER WHETHER THE PROJECT FOR WHICH THEY WERE PREPARED IS EXECUTED OR NOT. THEY ARE NOT TO BE USED ON OTHER PROJECTS OR EXTENSIONS TO THIS PROJECT EXCEPT BY AGREEMENT IN WRITING AND WITH APPROPRIATE COMPENSATION TO Narkweather Architects Inc.
COPYRIGHT 2016 Narkweather Architects

CITY OF RANCHO MIRAGE
OBSERVATORY
PROJECT DESCRIPTION: Rancho Mirage Public Library
SITE ADDRESS: 71-100 California 111, Rancho Mirage, CA 92270

SHEET CONTENT
MANUFACTURER'S STANDARDS

DRAWING SCALE: SCALE: (NONE)

ISSUE DATE		
MONTH	DAY	YEAR
SEPT	29	2016

1	REVISION DATE:
2	REVISION DATE:
3	REVISION DATE:
	REVISION DATE:
	REVISION DATE:

(FOR CITY ENGINEER STAMP)
RECOMMENDED FOR APPROVAL BY: LELAND E. COLE R.C.E. 47159 EXP. 12/31/17 DATE 9/27/16
APPROVED BY CITY OF RANCHO MIRAGE: WILLIAM A. DIOS, CITY ENGINEER R.C.E. 43910, EXP. 6/30/2017 DATE

DRAWING NUMBER
A5.2
SHEET # 32 OF 56
PRIVATE REFERENCE #
CITY REFERENCE #

Bid Set - 10/07/2016

REQUIRED SPECIAL INSPECTION

The following items require Special Inspection in accordance with Sections 1704 & 1705 of the 2013 California Building Code:

(only checked items are required)

Inspection Item	Notes
Structural Concrete (CBC Table 1705.3)	
☐ Foundations(1) ☑ Grade Beams / Piles ☐ Beams / Slabs ☑ Walls / Footings ☐ Welding of Reinforcement ☐ Anchor Bolts ☐ Shotcrete / Gunnite ☑ Seismic Resisting System ☐ Other:	See CBC Table 1705.8 for piles. Designed assuming full stresses
Structural Steel (AISC 360-10 Chapter N)	
☑ Field Welding(2) ☑ High Strength Bolting ☑ Seismic Resisting System ☐ Other:	See AISC 341-10 Chapter J
Structural Masonry (ACI 530 1.19)	
☑ Concrete Masonry (CMU) ☐ Seismic Resisting System ☐ Other:	
Structural Wood (CBC 1705.5)	
☐ High Load Diaphragms ☑ Seismic Resisting System(3) ☐ Other:	Wood Shearwalls, Collectors, Diaphragms
Miscellaneous Items	
☐ Epoxy Anchors ☐ Other:	Simpson SET-XP Epoxy (ICC-ER 2508)

1. FOUNDATION SPECIAL INSPECTION IS NOT REQUIRED FOR BUILDINGS THREE STORIES OR LESS IN HEIGHT.
2. SPECIAL INSPECTION NEED NOT BE PROVIDED FOR WELDING PERFORMED IN THE SHOP OF AN APPROVED FABRICATOR.
3. SPECIAL INSPECTION IS NOT REQUIRED FOR SHEARWALLS WHERE NAIL SPACING IS 4" OC OR LARGER.

CONTRACTOR RESPONSIBILITY

EACH CONTRACTOR OR SUB-CONTRACTOR RESPONSIBLE FOR THE CONSTRUCTION OF THE WIND AND/OR SEISMIC RESISTING SYSTEM THAT IS LISTED IN THE STATEMENT OF SPECIAL INSPECTIONS SHALL SUBMIT A WRITTEN STATEMENT OF RESPONSIBILITY TO THE BUILDING OFFICIAL AND THE OWNER PRIOR TO THE COMMENCEMENT OF WORK REQUIRING SPECIAL INSPECTION. THE CONTRACTOR'S STATEMENT OF RESPONSIBILITY SHALL CONTAIN ACKNOWLEDGMENT OF AWARENESS OF THE SPECIAL REQUIREMENTS CONTAINED IN THE STATEMENT OF SPECIAL INSPECTIONS.

F. REINFORCING STEEL

1. REINFORCING STEEL SHALL BE DEFORMED BARS CONFORMING TO ASTM A615 WITH THE FOLLOWING GRADES:
   I. #3 AND #4............................ GRADE 40 OR 60
   II. #5 AND LARGER.................... GRADE 60

3. REINFORCING BARS TO BE WELDED SHALL CONFORM TO ASTM A706 GRADE 60.

2. ALL DOWELS, ANCHOR BOLTS, AND OTHER INSERTS SHALL BE PROPERLY SECURED IN PLACE PRIOR TO PLACING CONCRETE.

3. ALL REINFORCING STEEL SHALL HAVE THE FOLLOWING MINIMUM CONCRETE COVERAGE:
   I. CONCRETE PLACED AGAINST EARTH .... 3"
   II. CONCRETE WITH FORMED SURFACES IN CONTACT WITH EARTH.............................. 2"
   III. CONCRETE EXPOSED TO WEATHER.................... 3"
   IV. SLABS, WALLS, AND JOISTS NOT EXPOSED TO WEATHER OR IN CONTACT WITH EARTH (#11 OR SMALLER).................... 3/4"
   V. BEAMS, COLUMNS, AND GIRDERS NOT EXPOSED TO WEATHER OR IN CONTACT WITH EARTH.................................. 1-1/2"

H. WOOD PANEL SHEATHING

1. WOOD STRUCTURAL PANELS MAY BE OSB OR PLYWOOD AND SHALL COMPLY WITH PRODUCT STANDARD PS1-09 OR PS2-10.

2. SEE PLAN FOR SHEATHING AND NAILING DATA.

3. FACE GRAIN SHALL RUN PERPENDICULAR TO SUPPORTS AT ROOF AND FLOOR SHEATHING.

4. MINIMUM SHEET DIMENSION SHALL BE 2'-0"

5. MINIMUM EDGE DISTANCE SHALL BE 3/8", AND SREWS SHALL NOT BE OVERDRIVEN THRU OUTER PLY. STAGGER SCREWS AT ADJACENT PLYWOOD SHEET.

7. TOP AND BOTTOM TRACKS AT SHEAR WALLS SHALL BE CONTINUOUS AND FREE OF UNLESS SPLICED PER PLAN.

M. STRUCTURAL STEEL

1. HOT ROLLED STRUCTURAL STEEL SHALL CONFORM TO THE FOLLOWING GRADES AND ASTM SPECIFICATIONS:
   I. WIDE FLANGE "W"...................... A992, A913-50 OR A572-50
   II. RECTANGULAR TUBE "HSS"........ A500-B
   III. STANDARD PIPE........................ A53-B
   IV. PLATES & MISC........................ A36 OR A572-50

2. WELDING SHALL CONFORM TO AWS D1.1/D1.1M. ALL WELDS SHALL BE UNIFORM IN SIZE AND APPEARANCE, AND FREE OF PINHOLES, POROSITY, UNDERCUTTING OR OTHER DEFECTS. ALL BUTT WELDS SHALL BE FULL PENETRATION.

3. WELDS SHALL BE DONE IN THE SHOP OF AN APPROVED FABRICATOR UNLESS OTHERWISE NOTED ON THE PLANS. ALL FIELD WELDING SHALL BE PERFORMED BY CERTIFIED WELDERS APPROVED BY THE BUILDING OFFICIAL WITH CONTINUOUS INSPECTION BY A DEPUTY INSPECTOR IS REQUIRED. (PER AISC 360-10 CHAPTER N5.4)

4. STRUCTURAL STEEL NOT ENCASED IN CONCRETE OR MASONRY SHALL BE SHOP PAINTED AS SPECIFIED. ANY ABRASION SHALL BE TOUCHED UP AFTER ERECTION.

5. FABRICATOR SHALL SUBMIT SHOP DRAWINGS TO STRUCTURAL ENGINEER FOR REVIEW PRIOR TO START OF FABRICATION. FABRICATION SHALL CONFORM TO AISC SPECIFICATIONS.

6. BOLTS SHALL CONFORM TO ASTM A307, UNLESS OTHERWISE NOTED.

7. ALL STEEL FABRICATIONS SHALL BE DONE IN A SHOP LICENSED BY THE GOVERNING CITY OR COUNTY.

N. COLD FORMED STEEL

1. COLD FORMED STEEL FABRICATION AND ERECTION SHALL COMPLY WITH THE 2010 NORTH AMERICAN SPECIFICATION FOR THE DESIGN OF COLD FORMED STEEL STRUCTURAL MEMBERS (AISI S100-07/S2-10).

2. WELDING OF LIGHT GUAGE MEMBERS SHALL COMPLY WITH AWS D1.3 "STRUCTURAL WELDING CODE - SHEET STEEL."

3. LOAD BEARING STUDS, TRACKS, CHANNELS, JOISTS, ETC SHALL CONFORM TO THE PROVISIONS OF THE STEEL STUD MANUFACTURERS ASSOCIATION (SSMA) IN ACCORDANCE WITH ICC ER-4943. EACH STUD OR JOIST SHALL BE IDENTIFIED WITH ITS THICKNESS AND YIELD STRESS.

4. COLD FORMED MEMEBERS ARE IDENTIFIED AS FOLLOWS:
   600S250-43
   - THICKNESS OF PART IN MILS
   - WIDTH OF PART IN MILS
   - TYPE OF PART PER SSMA
   - DEPTH OF PART IN MILS

5. ROOF AND FLOOR DECKING SHALL BE VERCO MANUFACTURING COMPANY CONFORMING TO ICC ER-1735P.

6. STEEL GRADE AND FINISH OF COLD FORMED SECTIONS SHALL CONFORM TO ASTM A653SS OR ASTM A570 WITH GRADES AS FOLLOWS:
   I. STUDS, TRACKS, JOISTS, HEADERS
      a. THICKNESS UP TO 43mils(18ga) .... GRADE 33ksi
      b. THICKNESS 54mils(16ga) AND ABOVE .. GRADE 50ksi
   II. MISC CHANNELS .... GRADE 33ksi
   III. DECKING .... GRADE 33ksi

7. SCREWS SHALL BE HILTI KWIK-PRO. SCREWS EXPOSED TO WEATHER SHALL BE ZINC PLATED AND PROVIDED WITH A SEALING WASHER.

A.2 SUBMITTALS

1. THE FOLLOWING ITEMS SHALL BE SUBMITTED TO THE ARCHITECT AND ENGINEER OF RECORD FOR REVIEW AND APPROVAL PRIOR TO FABRICATION.
   a. CONCRETE REINFORCING SHOP DRAWINGS.
   b. CONCRETE MIX DESIGNS.
   c. HOT-ROLLED STEEL SHOP DRAWINGS.
   d. COLD-FORMED STEEL SHOP DRAWINGS.

2. THE FOLLOWING ITEMS SHALL BE SUBMITTED TO THE ENGINEER OF RECORD FOR REVIEW PRIOR TO PROJECT COMPLETION.
   a. CONCRETE CYLINDER TEST RECORDS (STRENGTH AT 28 DAYS).
   b. MASONRY PRISM AND/OR CORE TEST RECORDS.
   c. SPECIAL INSPECTION REPORTS.

B. GRADING AND SITEWORK

1. THE SURROUNDING AREAS SHOULD BE GRADED SO AS TO ENSURE DRAINAGE AWAY FROM THE BUILDING.

2. ALL BACKFILL SHALL BE COMPACTED PER THE SOILS REPORT

3. SOILS REPORT REQUIREMENTS AND RECOMMENDATIONS:

   A. REFER TO THE FOLLOWING SOILS REPORT FOR INFORMATION NOT NOTED:
      I. LANDMARK GEO-ENGINEERS AND GEOLOGISTS REPORT #LP15100 DATED 09/30/2015
      II. 780 N. 4TH STREET, EL CENTRO, CA 92243
      III. (760) 370-3000

   B. THE APPROVED SOIL REPORT SHALL BE A PART OF THE PLANS AND SHALL BE KEPT AT THE JOB SITE AT ALL TIMES.

4. ALL EXCAVATIONS SHALL BE OBSERVED AND APPROVED BY THE GEOTECHNICAL ENGINEER PRIOR TO THE PLACEMENT OF REINFORCING STEEL.

5. ALL EXCAVATIONS SHALL BE APPROVED BY THE INSPECTOR PRIOR TO PLACEMENT OF STEEL OR CONCRETE.

6. ALL WATER SHALL BE REMOVED FROM FOUNDATION EXCAVATIONS PRIOR TO PLACING OF CONCRETE.

7. NO PERSON SHALL DESCEND INTO TRENCHES OR EXCAVATIONS 5' OR MORE IN DEPTH, UNLESS NECESSARY PERMITS HAVE BEEN OBTAINED FROM THE STATE OF CALIFORNIA DIVISION OF OCCUPATIONAL SAFETY.

8. SEE CIVIL DRAWINGS, IF PROVIDED, FOR ANY ADDITIONAL SPECIFICATIONS AND INFORMATION.

9. EXCAVATIONS SHALL BE MADE IN COMPLIANCE WITH CAL-OSHA REGULATIONS.

C. FOUNDATIONS

1. ALL HOLDDOWN HARDWARE IS TO BE SECURED IN PLACE PRIOR TO FOUNDATION INSPECTION.

2. ALL EXTERIOR AND BEARING STUD WALLS SHALL BE SECURED TO THE FOUNDATION WITH 5/8" ANCHOR BOLTS EMBEDDED 7" INTO CONCRETE SPACED NO FARTHER THAN 6'-0" APART UNLESS NOTED OTHERWISE. INSTALL ONE BOLT WITHIN 12" OF THE END OF EACH BOTTOM TRACK PIECE. PROVIDE A MINIMUM OF 7 BOLT DIAMETERS END DISTANCE.

3. POWDER DRIVEN FASTENERS ("SHOT-PINS") SHALL NOT BE USED TO PERMANENTLY SECURE STUD EXTERIOR OR BEARING WALLS TO FOUNDATIONS.

4. ALL HOLDDOWN HARDWARE SHALL BE RE-TIGHTENED JUST PRIOR TO WALL COVERING.

5. ANCHOR BOLTS SHALL COMPLY WITH ASTM F1554 GRADE 36 UNLESS NOTED OTHERWISE.

6. PROVIDE THE SPECIFIED MINIMUM EMBEDMENT BELOW ANY COLD JOINTS IN TWO POUR FOOTINGS UNLESS NOTED OTHERWISE.

D. CONCRETE AND FORMWORK

1. CEMENT SHALL CONFORM TO THE REQUIREMENTS OF ASTM C150 TYPE II.

2. SPECIFIED COMPRESSIVE STRENGTH F'C SHALL BE AS FOLLOWS:
   I. SLABS ON GRADE...................................... 2500psi
   II. RETAINING WALLS AND FOOTINGS............. 3000psi
   III. WALLS AND STRUCTURAL SLABS.............. 3000psi
   IV. BEAMS AND COLUMNS............................... 3000psi
   V. PILES, CAISSONS, AND GRADE BEAMS...... 3000psi

3. COARSE AGGREGATE TO BE HARD, DURABLE CRUSHED STONE OR GRAVEL GRADED PER ASTM C33. MAXIMUM SIZE OF COARSE AGGREGATES SHALL NOT EXCEED 1-1/2 INCHES.

4. SAND SHALL BE CLEAN, HARD, DURABLE, WASHED, FREE FROM SILT LOAM OR CLAY.

5. MIXING WATER SHALL BE CLEAN AND FREE FROM INJURIOUS AMOUNTS OF ACIDS, ALKALIS, ORGANIC MATERIALS OR OTHER DELETERIOUS SUBSTANCES.

6. FORM WORK SHALL CONFORM TO ACI 318-11 CHAPTER 6. FORM WORK FOR STRUCTURAL SLAB TO REMAIN IN PLACE AT LEAST 14 DAYS AFTER POURING THE CONCRETE.

7. ALL PIPES AND DUCTS THROUGH CONCRETE TO BE SLEEVED PER ACI 318-11 CHAPTER 6. VERIFY ALL OPENING LOCATIONS WITH PLUMBER AND ELECTRICIAN.

8. CONCRETE FLOOR SLAB IN AREAS TO BE COVERED WITH MOISTURE SENSITIVE COVERINGS SHALL BE CONSTRUCTED OVER A PLASTIC MEMBRANE. THE PLASTIC SHOULD BE PROPERLY LAPPED SEALED AND PROTECTED WITH A SAND BASE. SEE FOUNDATION PLAN FOR MEMBRANE AND SAND BASE THICKNESS. SEE DETAILS FOR EXPANSION JOINTS, CONSTRUCTION JOINTS AND CRACK CONTROL JOINT AS REQUIRED IF CALLED OUT ON THE PLANS.

9. EXTERIOR SLABS SHALL BE STRUCK LEVEL AND SLOPED TO DRAIN AWAY FROM STRUCTURE AND SHALL NOT HOLD PUDDLES.

SYMBOL LEGEND

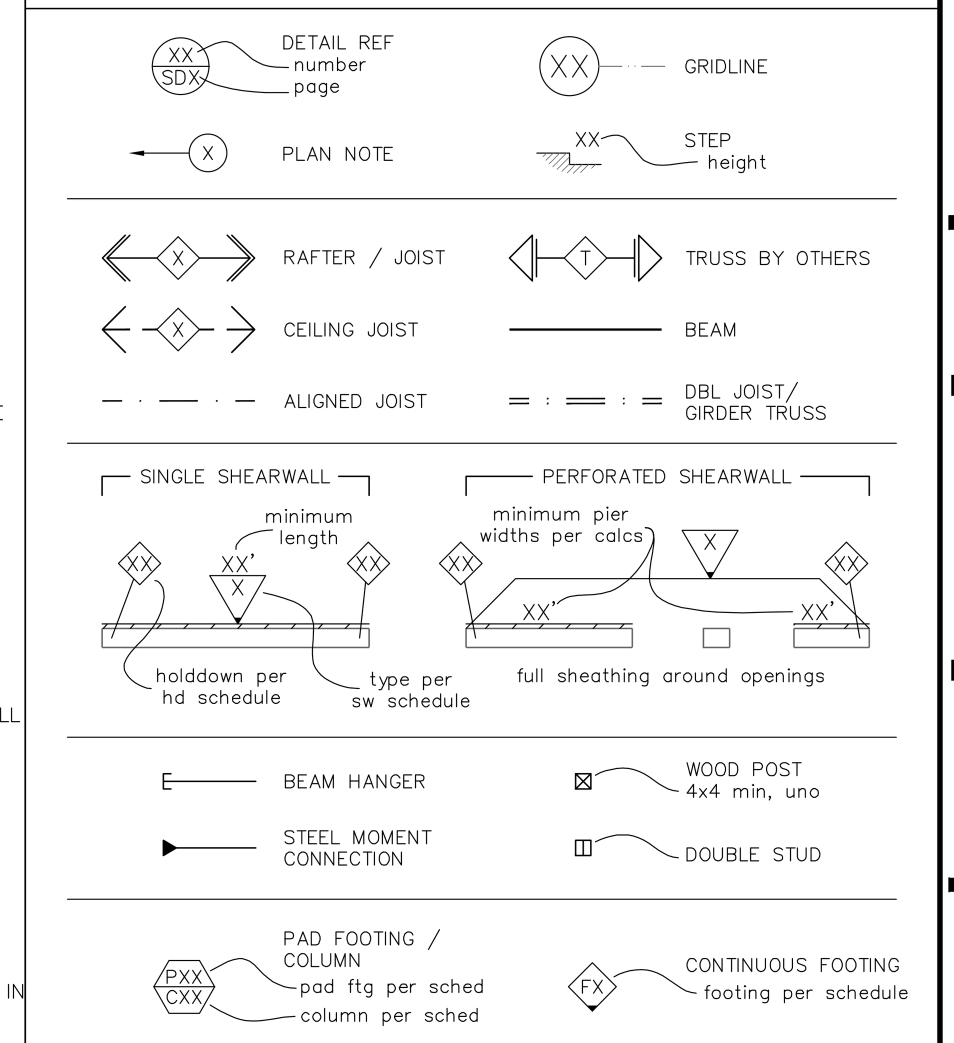

A. GENERAL SPECIFICATIONS

1. ALL DESIGN AND CONSTRUCTION SHALL BE IN ACCORDANCE WITH THE 2013 CALIFORNIA BUILDING CODE, 2013 CALIFORNIA PLUMBING CODE, 2013 CALIFORNIA MECHANICAL CODE, AND THE 2013 CALIFORNIA ELECTRICAL CODE.

2. ALL DETAILS, SECTIONS, AND NOTES ON DRAWINGS ARE INTENDED TO BE TYPICAL AND SHALL APPLY TO SIMILAR SITUATIONS ELSEWHERE UNLESS OTHERWISE NOTED.

3. THE CONTRACTOR SHALL VERIFY ALL DIMENSIONS AND CONDITIONS AT THE SITE. WHERE ACTUAL CONDITIONS CONFLICT WITH THE DRAWINGS, DISCREPANCIES SHALL BE REPORTED TO THE ENGINEER SO THAT THE PROPER REVISIONS CAN BE MADE PRIOR TO PROCEEDING WITH THE WORK.

4. ALL GENERAL CONTRACTORS, SUB-CONTRACTORS, ARCHITECTS, AND ENGINEERS CONDUCTING BUSINESS ARE REQUIRED TO MAINTAIN A CURRENT BUSINESS LICENSE.

5. A RE-INSPECTION FEE WILL BE CHARGED FOR AN INSPECTION WHICH IS CALLED WITHOUT PROVIDING ACCESS, PLANS, OR IF THE JOB IS NOT READY.

6. DIMENSIONS SHALL NOT BE SCALED FROM THE DRAWINGS.

7. ALL ASTM DESIGNATIONS SHALL BE AS AMENDED TO DATE UNLESS OTHERWISE NOTED.

8. ALL OMISSIONS OR CONFLICTS BETWEEN THE VARIOUS ELEMENTS OF THE WORKING DRAWINGS AND/OR SPECIFICATIONS SHALL BE BROUGHT TO THE ATTENTION OF THE ENGINEER BEFORE PROCEEDING WITH ANY WORK INVOLVED.

9. CONTRACTOR TO PROVIDE ADEQUATE SHORING AND BRACING TO SUPPORT ALL LOADS DURING CONSTRUCTION.

10. A SURVEY SHALL BE PROVIDED BY A LICENSED SURVEYOR ON STRUCTURES WHICH DEFINE PROPERTY LINES, SETBACKS, DESIGNATED PARKLAND OR STREET RIGHT-OF-WAY.

A.1 DESIGN BASIS

1. THESE STRUCTURAL DRAWINGS ARE BASED UPON THE 2013 CALIFORNIA BUILDING CODE AND FOLLOWING DESIGN PARAMETERS:

a. GRAVITY LOADS
   ROOFING MATERIAL WEIGHT 2.0psf
   ROOF LIVE LOAD 20psf
   FLOOR LIVE LOAD 100psf

b. SEISMIC DESIGN PARAMETERS
   IMPORTANCE FACTOR .... I 1.0
   RISK CATEGORY II
   SITE CLASS .... D
   SEISMIC DESIGN CATEGORY .... D
   MAPPED ACCELERATIONS .... Ss 1.50
   S1 .... 0.66
   DESIGN ACCELERATIONS .... Sds 1.0
   Sd1 ...... 0.66
   RESPONSE MODIFICATION FACTOR .... R 4, 1.25, 5, 3.5
   OVERSTRENGTH FACTOR .... Ω_0 3

   FORCE RESISTING SYSTEM: <u>BEARING WALL SYSTEM</u>
   ANALYSIS PROCEDURE: <u>EQUIVALENT LATERAL FORCE PROCEDURE</u>
   SEISMIC RESPONSE COEFFICIENT .... Cs 0.25, 0.80, 0.20, 0.29

c. WIND DESIGN PARAMETERS
   EXPOSURE CATEGORY C
   RISK CATEGORY II
   BASIC WIND SPEED - ULTIMATE............................. 110mph
   BASIC WIND SPEED - NOMINAL.............................. 85mph
   EXPOSURE FACTOR .... λ 1.45

d. SOILS DESIGN PARAMETERS
   SOIL TYPE .... Silty Sand
   DESIGN PASSIVE PRESSURE 300pcf
   ALLOWABLE BEARING PRESSURE .... 1800 psf
   COEFFICIENT OF FRICTION 0.40

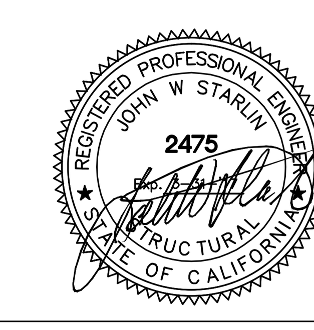

Narkweather ARCHITECTS INC.
73 330 HWY 111, SUITE A / PALM DESERT, CA 92260-4016
PHONE: (760) 346-4090 / E-MAIL: info@narkweather.net

OWNERSHIP OF DOCUMENTS
DRAWINGS AND SPECIFICATIONS AS INSTRUMENTS OF SERVICE ARE AND SHALL REMAIN THE PROPERTY OF THE DESIGNER WHETHER THE PROJECT FOR WHICH THEY WERE PREPARED IS EXECUTED OR NOT. THEY ARE NOT TO BE USED ON OTHER PROJECTS OR EXTENSIONS TO THIS PROJECT EXCEPT BY AGREEMENT IN WRITING AND WITH APPROPRIATE COMPENSATION TO Narkweather Architects Inc.
COPYRIGHT 2016 Narkweather Architects

CITY OF RANCHO MIRAGE

PROJECT DESCRIPTION: O B S E R V A T O R Y — Rancho Mirage Public Library

SITE ADDRESS: 71-100 California 111, Rancho Mirage, CA 92270

SHEET CONTENT: STRUCTURAL SPECIFICATIONS

DRAWING SCALE: NTS

ISSUE DATE		
MONTH	DAY	YEAR
JUNE	13	2016

1 REVISION DATE:
REVISION DATE:
REVISION DATE:
REVISION DATE:
REVISION DATE:

(PLAN CHECK ENGINEER STAMP)
RECOMMENDED FOR APPROVAL BY: ______ DATE
R.C.E. ______ EXP.
APPROVED BY CITY OF RANCHO MIRAGE: ______ DATE
WILLIAM A. ENOS, CITY ENGINEER
R.C.E. 43910, EXP. 6/30/2013

DRAWING NUMBER
S0
SHEET # OF 51
PRIVATE REFERENCE #
CITY REFERENCE #

Bid Set - 10/07/2016

WALL LEGEND	
	STEEL STUD
	CONCRETE

GRADE BEAM SCHEDULE			
MARK	SIZE	REINFORCEMENT	TIES
GB1	18"w x 18"d	(4)-#5 TOP & BOT	#3 @ 9"
GB2	18"w x 18"d	(4)-#7 TOP & BOT	#3 @ 7"
GB3	18"w x 18"d	(4)-#6 TOP & BOT	#3 @ 9"
GB4	12"w x 18"d	(3)-#5 TOP & BOT	#3 @ 9"

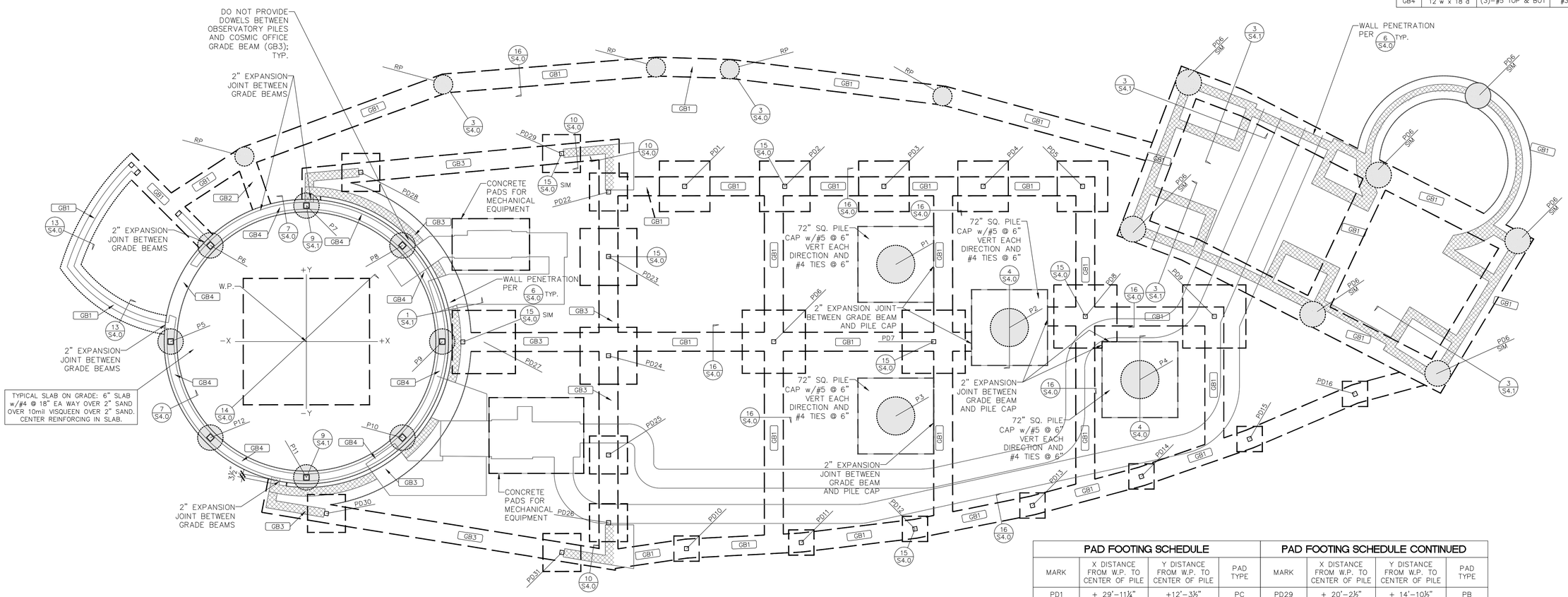

CAST-IN-PLACE PILE SCHEDULE						
MARK	X DISTANCE FROM W.P. TO CENTER OF PILE	Y DISTANCE FROM W.P. TO CENTER OF PILE	DIAMETER	VERTICAL REINFORCMENT	TIES	MINIMUM EMBEDMENT BELOW GRADE
P1	+ 46'-8"	+ 6'-1¼"	36"ø	(14)-#8	#3 @ 16"	8'-0"
P2	+ 55'-8"	+ 1'-1¼"	36"ø	(14)-#8	#3 @ 16"	8'-0"
P3	+ 46'-8"	- 5'-10¾"	36"ø	(14)-#8	#3 @ 16"	8'-0"
P4	+ 66'-0"	- 3'-0"	36"ø	(14)-#8	#3 @ 16"	8'-0"
P5	- 10'-9"	0'-0"	24"ø	(8)-#8	#3 @ 12"	6'-0"
P6	- 7'-7¼"	+ 7'-7¼"	24"ø	(8)-#8	#3 @ 12"	6'-0"
P7	0'-0"	+ 10'-9"	24"ø	(8)-#8	#3 @ 12"	6'-0"
P8	+ 7'-7¼"	+ 7'-7¼"	24"ø	(8)-#8	#3 @ 12"	6'-0"
P9	+ 10'-9"	0'-0"	24"ø	(8)-#8	#3 @ 12"	6'-0"
P10	+ 7'-7¼"	- 7'-7¼"	24"ø	(8)-#8	#3 @ 12"	6'-0"
P11	0'-0"	- 10'-9"	24"ø	(8)-#8	#3 @ 12"	6'-0"
P12	- 7'-7¼"	- 7'-7¼"	24"ø	(8)-#8	#3 @ 12"	6'-0"

PAD FOOTING SCHEDULE			
MARK	X DISTANCE FROM W.P. TO CENTER OF PILE	Y DISTANCE FROM W.P. TO CENTER OF PILE	PAD TYPE
PD1	+ 29'-11¼"	+12'-3½"	PC
PD2	+ 37'-10½"	+12'-3½"	PC
PD3	+ 45'-8¾"	+12'-3½"	PC
PD4	+ 53'-7"	+12'-3½"	PC
PD5	+ 61'-5½"	+12'-3½"	PC
PD6	+ 37'-0"	0'-0"	PE
PD7	+ 49'-8"	0'-0"	PE
PD8	+ 61'-8"	+ 2'-0"	PE
PD9	+ 71'-10½"	+ 2'-0"	PE
PD10	+ 30'-1"	- 16'-4½"	PA
PD11	+ 39'-2¼"	- 15'-10¾"	PA
PD12	+ 48'-2¼"	- 14'-9¾"	PA
PD13	+ 57'-5¾"	- 12'-11¾"	PA
PD14	+ 66'-1¼"	- 10'-8"	PA
PD15	+ 74'-8¼"	- 7'-8½"	PA
PD16	+ 83'-0¼"	- 4'-1¾"	PA
PD17	- 4'-10¾"	+ 14'-7½"	PD
PD18	+ 10'-11¼"	+ 20'-5"	PD
PD19	+ 27'-9½"	+ 21'-9"	PD
PD20	+ 33'-7¾"	+ 21'-7¼"	PD
PD21	+ 50'-6"	+ 19'-5½"	PD
PD22	+ 23'-11"	+ 11'-10"	PB
PD23	+ 23'-11"	+ 6'-8¾"	PD
PD24	+ 23'-11"	- 1'-1½"	PD
PD25	+ 23'-11"	- 8'-11¾"	PB
PD26	+ 23'-11"	- 14'-4"	PB
PD27	+ 14'-0½"	0'-0"	PE
PD28	+ 4'-3¾"	+ 13'-4¾"	PB

PAD FOOTING SCHEDULE CONTINUED			
MARK	X DISTANCE FROM W.P. TO CENTER OF PILE	Y DISTANCE FROM W.P. TO CENTER OF PILE	PAD TYPE
PD29	+ 20'-2½"	+ 14'-10½"	PB
PD30	+ 1'-7"	- 13'-7¼"	PB
PD31	+ 20'-2¾"	- 16'-8¼"	PB

PAD TYPE FOOTING SCHEDULE		
MARK	SIZE	REINFORCEMENT
PA	24"x24"x18"d	(2)-#5 EA WAY
PB	36"x36"x18"d	(3)-#5 EA WAY
PC	48"x48"x18"d	(4)-#5 EA WAY
PD	54"x54"x18"d	(5)-#5 EA WAY
PE	60"x60"x18"d	(5)-#5 EA WAY

REGISTERED PROFESSIONAL ENGINEER
JOHN W STARLUK
2475
STRUCTURAL
STATE OF CALIFORNIA

Narkweather ARCHITECTS INC.
73 330 HWY 111, SUITE A / PALM DESERT, CA 92260-4016
PHONE: (760) 346-4000 / E-MAIL: info@narkweather.net

OWNERSHIP OF DOCUMENTS
DRAWINGS AND SPECIFICATIONS AS INSTRUMENTS OF SERVICE ARE AND SHALL REMAIN THE PROPERTY OF THE DESIGNER WHETHER THE PROJECT FOR WHICH THEY WERE PREPARED IS EXECUTED OR NOT. THEY ARE NOT TO BE USED ON OTHER PROJECTS OR EXTENSIONS TO THIS PROJECT EXCEPT BY AGREEMENT IN WRITING AND WITH APPROPRIATE COMPENSATION TO Narkweather Architects Inc.
COPYRIGHT 2016 Narkweather Architects

CITY OF RANCHO MIRAGE

PROJECT DESCRIPTION: OBSERVATORY
Rancho Mirage Public Library
SITE ADDRESS: 71-100 California 111, Rancho Mirage, CA 92270

SHEET CONTENT
FOUNDATION PLAN

DRAWING SCALE: 1/4" = 1'-0"

ISSUE DATE		
MONTH	DAY	YEAR
JUNE	13	2016

REVISION DATE:
REVISION DATE:
REVISION DATE:
REVISION DATE:
REVISION DATE:

(FOR DISC DIGITAL STAMP)
RECOMMENDED FOR APPROVAL BY: R.C.E. DATE
APPROVED BY CITY OF RANCHO MIRAGE: EPD DATE
WILLIAM J. KIRK, CITY ENGINEER
R.C.E. 43, 101, Exp. 6/30/2015

DRAWING NUMBER
S1.0
SHEET # OF 51
PRIVATE REFERENCE #
CITY REFERENCE #

Bid Set - 10/07/2016

SHEARWALL SCHEDULE

MARK	ALLOW	EDGE/ SCREWS	SILL TRACK A.B.	SILL TRACK SCREW	TOP TRACK SCREW
15/32" STRUCT I (FIVE PLY)					
Q	312	#8 @ 6" (6)	42"	8"	8"
Q2	624		21"	4"	4"
R	396	#8 @ 4" (6)	32"	6"	6"
R2	792		16"	3"	3"
S	710	#8 @ 3" (6)	20"	4"	4"
S2	1420		10"	2"	2"
T	876	#8 @ 2" (6)	20"	4"	4"
T2	1752		10"	2"	2"

NOTES:
(1) – VALUES NOTED ARE MAXIMUM SPACINGS. INSTALL A MINIMUM OF TWO FASTENERS PER PIECE. CONNECTORS SHALL BE AS FOLLOWS:
A. "BOLT" – ⅝"ø F1554–36 ANCHOR BOLT EMBEDDED A MINIMUM OF 7" INTO CONCRETE OR MASONRY.
B. "SCREW" – #10 ITW Buildex "TEKS" (OCC ER–1976).
(2) – ANCHORS SHALL BE INSTALLED WITH 3"X3"X0.229" MINIMUM PLATE WASHERS.
(3) – L2, M2, P2, ETC. DENOTES SHEATHING TO BOTH SIDES OF SHEAR WALL.
(4) – STUDS, TRACK, AND BLOCKING SHALL BE 18ga (43mil) MINIMUM, UNO.
(5) – FIELD SCREWS SHALL MATCH THE SIZE OF THE EDGE SCREWS AND BE SPACED @ 12" OC
(6) – USE #10 SCREWS WHERE STUDS ARE 14Ga (68) OR THICKER

HOLDDOWN SCHEDULE

MARK	TYPE	BOLT	CAPACITY
4	S/HDU4	SSTB16	2320
6	S/HDU6	SB ¾x24	4895
9	S/HDU9	SB ⅞x24	6965
11	S/HDU11	⅞"ø ROD	11100

NOTES:
(1) – ROD – ASTM F1554 Gr 36 THREADED ROD WITH EMBEDDED DOUBLE NUT AND WASHER.
(2) – TYPE – USE SIMPSON STRONG TIE HOLD DOWNS

CONT FOOTING SCHEDULE

MARK	SIZE	REINFORCEMENT
F1	18"w x 18"d	(2)–#5 TOP & BOT

WALL LEGEND

STEEL STUD
CONCRETE
CMU

JOIST SCHEDULE

MARK	SECTION
1	800S162–68 @ 16" OC
2	800S250–97 @ 16" OC
3	1000S200–97 @ 16" OC
4	800S250–97 @ 12" OC

BEAM SCHEDULE

MARK	SECTION
CFBM1	(2)–800S137–43 BOXED BEAM
CFBM2	(2)–800S200–97 BOXED BEAM
SBM1	HSS 5½x4X3/16 FLAT, CURVED (NO SPLICES)

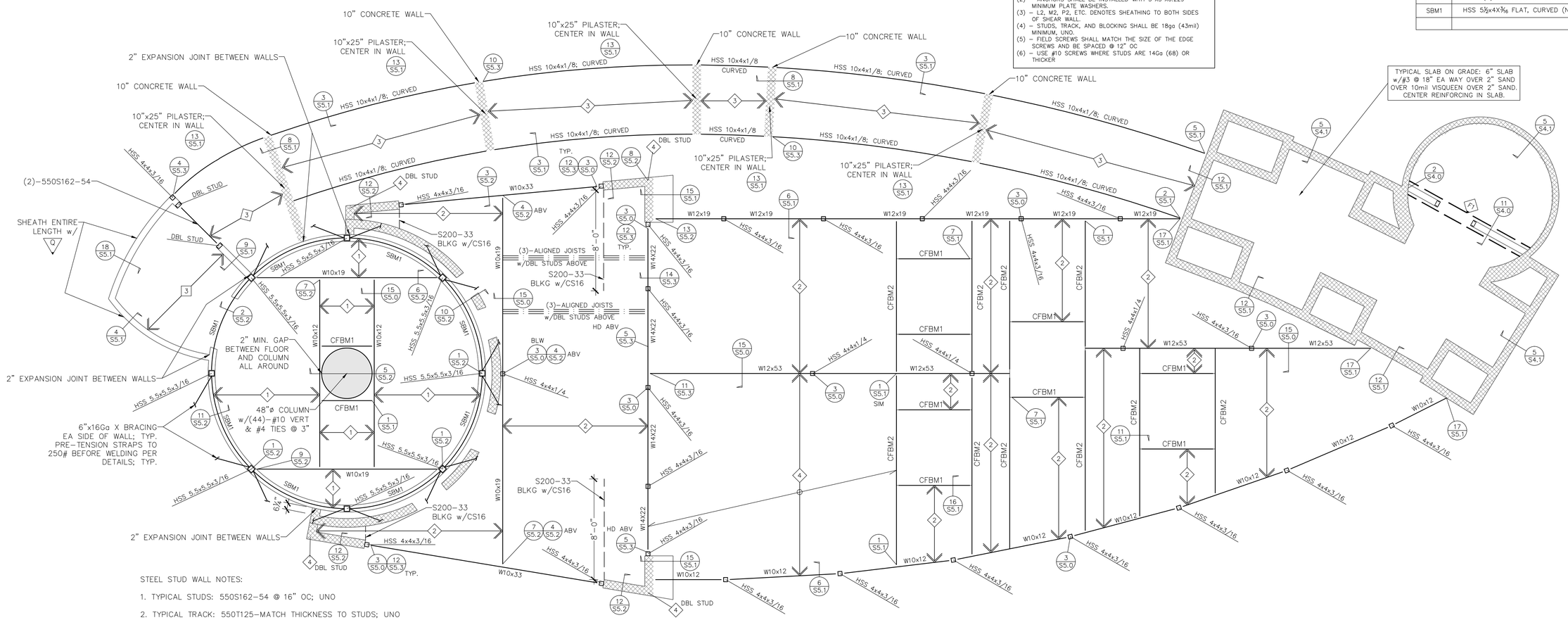

STEEL STUD WALL NOTES:

1. TYPICAL STUDS: 550S162–54 @ 16" OC; UNO
2. TYPICAL TRACK: 550T125–MATCH THICKNESS TO STUDS; UNO
3. LINE UP A STUD UNDER EACH JOIST
4. FOR TYPICAL TOP TRACK SPLICE SEE (12/S5.0)
5. FOR TYPICAL WALL CONSTRUCTION SEE (7/S5.0)
6. ANY JOIST SPANS OVER 8'–0" SHALL HAVE A ROW OF 18 Ga FULL DEPTH BLOCKING AT MID–SPAN.
7. NO PUNCHOUTS ARE ALLOWED WITHIN 24" OF SUPPORTS FOR FLOOR JOISTS.

FLOOR/DECK DIAPHRAGM (U.N.O.): ¾" STRUCT I w/#10 SMS @ 6/6/12" OC BLOCKED (MIN SPAN RATING 48/24)

REGISTERED PROFESSIONAL ENGINEER JOHN W STARLIN 2475 STRUCTURAL STATE OF CALIFORNIA

Narkweather ARCHITECTS INC.
73 330 HWY 111, SUITE A / PALM DESERT, CA 92260–4016
PHONE: (760) 346–4000 / E–MAIL: info@narkweather.net

OWNERSHIP OF DOCUMENTS
DRAWINGS AND SPECIFICATIONS AS INSTRUMENTS OF SERVICE ARE AND SHALL REMAIN THE PROPERTY OF THE DESIGNER WHETHER THE PROJECT FOR WHICH THEY WERE PREPARED IS EXECUTED OR NOT. THEY ARE NOT TO BE USED ON OTHER PROJECTS OR EXTENSIONS TO THIS PROJECT EXCEPT BY AGREEMENT IN WRITING AND WITH APPROPRIATE COMPENSATION TO Narkweather Architects Inc.
COPYRIGHT 2016 Narkweather Architects

CITY OF RANCHO MIRAGE

PROJECT DESCRIPTION: OBSERVATORY
Rancho Mirage Public Library
SITE ADDRESS: 71–100 California 111, Rancho Mirage, CA 92270

SHEET CONTENT
FLOOR FRAMING PLAN

DRAWING SCALE: 1/4" = 1'–0"

ISSUE DATE		
MONTH	DAY	YEAR
JUNE	13	2016

1	REVISION DATE:
	REVISION DATE:
	REVISION DATE:
	REVISION DATE:
	REVISION DATE:

(FOR CITY ENGINEER STAMP)
RECOMMENDED FOR APPROVAL BY: DATE
R.E.E. EXP.
APPROVED BY CITY OF RANCHO MIRAGE: DATE
WILLIAM A. ENGE, CITY ENGINEER
R.C.E. 34312, EXP. 12/31/2017

DRAWING NUMBER
S2.0
SHEET # OF 51
PRIVATE REFERENCE #
CITY REFERENCE #

Bid Set - 10/07/2016

◇ HOLDDOWN SCHEDULE

MARK	TYPE	BOLT	CAPACITY
4	S/HDU4	SSTB16	2320
6	S/HDU6	SB ⅝x24	4895
9	S/HDU9	SB ⅞x24	6965
11	S/HDU11	⅞"ø ROD	11100

NOTES:
(1) – ROD – ASTM F1554 Gr 36 THREADED ROD WITH EMBEDDED DOUBLE NUT AND WASHER.
(2) – TYPE – USE SIMPSON STRONG TIE HOLD DOWNS

▽ SHEARWALL SCHEDULE

MARK	ALLOW	EDGE/ SCREWS	SILL TRACK A.B.	SILL TRACK SCREW	TOP TRACK SCREW
15/32" STRUCT I (FIVE PLY)					
Q	312	#8 @ 6" (4)	42"	8"	8"
Q2	624		21"	4"	4"
R	396	#8 @ 4" (4)	32"	6"	6"
R2	792		16"	3"	3"
S	710	#8 @ 3" (4)	20"	4"	4"
S2	1420		10"	2"	2"
T	876	#8 @ 2" (4)	20"	4"	4"
T2	1752		10"	2"	2"

NOTES:
(1) – VALUES NOTED ARE MAXIMUM SPACINGS. INSTALL A MINIMUM OF TWO FASTENERS PER PIECE. CONNECTORS SHALL BE AS FOLLOWS:
A. "BOLT" – ⅝"ø F1554–36 ANCHOR BOLT EMBEDDED A MINIMUM OF 7" INTO CONCRETE OR MASONRY.
B. "SCREW" – #10 ITW Buildex "TEKS" (ICC ER–1976).
(2) – ANCHORS SHALL BE INSTALLED WITH 3"X3"X0.229" MINIMUM PLATE WASHERS.
(3) – L2, M2, P2, ETC. DENOTES SHEATHING TO BOTH SIDES OF SHEAR WALL.
(4) – STUDS, TRACK, AND BLOCKING SHALL BE 18ga (43mil) MINIMUM, UNO.
(5) – FIELD SCREWS SHALL MATCH THE SIZE OF THE EDGE SCREWS AND BE SPACED @ 12" OC
(6) – USE #10 SCREWS WHERE STUDS ARE 14Ga (68) OR THICKER

WALL LEGEND

STEEL STUD

CONCRETE. 8" THICK MIN. #5 @ 16" VERT @ ℄ & #5 @ 18" HORIZ. NOTE: IF WALL THICKNESS IS GREATER THAN 10" PROVIDE (2)–LAYERS OF REINFORCING, #5 @ 18" VERT & HORIZ

8" CMU THICK MIN. #5 @ 16" VERT @ ℄ & #5 @ 16" HORIZ.

◇ JOIST SCHEDULE

MARK	SECTION
1	600S250–54 @ 16" OC
2	400S125–43 @ 16" OC
3	HSS 3.5x2x⅛ CURVED @ 16" OC

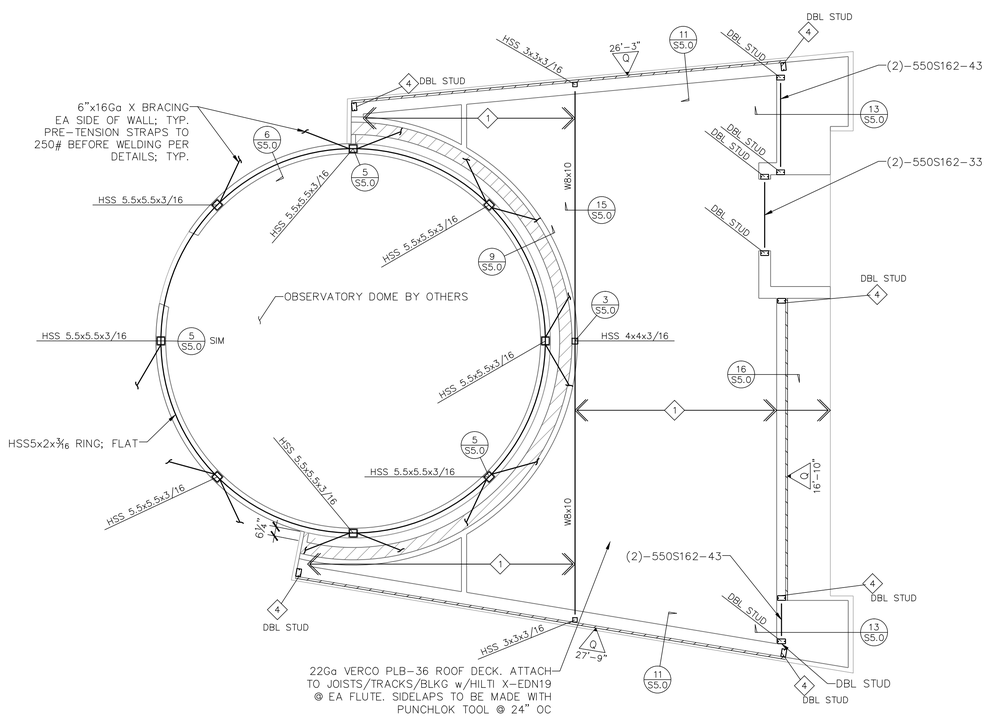

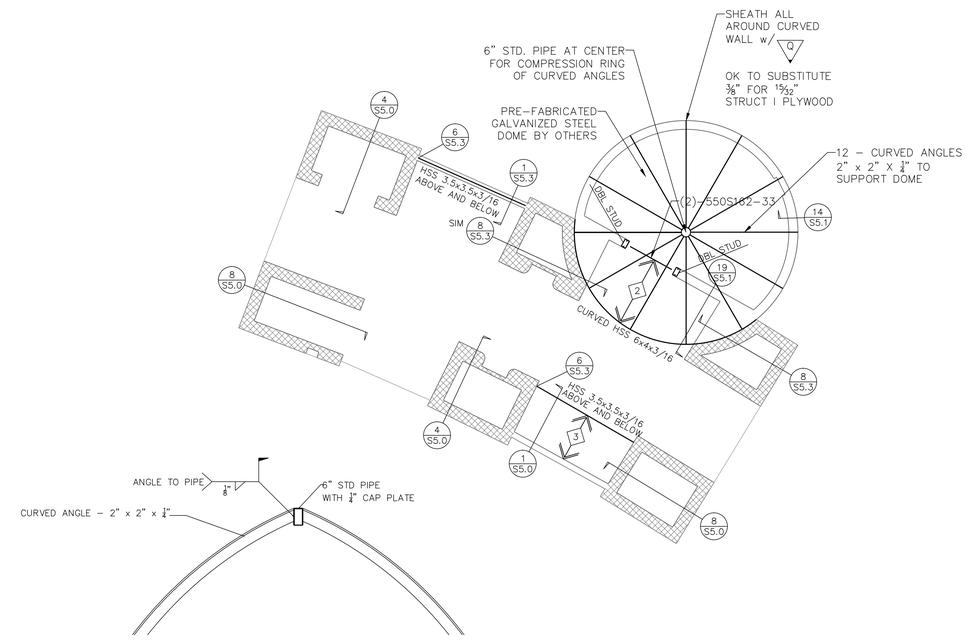

SUPPORT ANGLE TO PIPE CONNECTION

STEEL STUD WALL NOTES:

1. TYPICAL STUDS: 550S162–54 @ 16" OC; UNO
2. TYPICAL TRACK: 550T125–MATCH THICKNESS TO STUDS; UNO
3. LINE UP A STUD UNDER EACH JOIST
4. FOR TYPICAL TOP TRACK SPLICE SEE 12/S5.0
5. FOR TYPICAL WALL CONSTRUCTION SEE 7/S5.0
6. ANY JOIST SPANS OVER 8'–0" SHALL HAVE A ROW OF 18 Ga FULL DEPTH BLOCKING AT MID–SPAN.
7. NO PUNCHOUTS ARE ALLOWED WITHIN 24" OF SUPPORTS FOR FLOOR JOISTS.

REGISTERED PROFESSIONAL ENGINEER JOHN W STANLIN 2475 STRUCTURAL STATE OF CALIFORNIA

Narkweather ARCHITECTS INC.
73 330 HWY 111, SUITE A / PALM DESERT, CA 92260–4016
PHONE: (760) 346–4000 / E–MAIL: info@narkweather.net

OWNERSHIP OF DOCUMENTS
DRAWINGS AND SPECIFICATIONS AS INSTRUMENTS OF SERVICE ARE AND SHALL REMAIN THE PROPERTY OF THE DESIGNER WHETHER THE PROJECT FOR WHICH THEY WERE PREPARED IS EXECUTED OR NOT. THEY ARE NOT TO BE USED ON OTHER PROJECTS OR EXTENSIONS TO THIS PROJECT EXCEPT BY AGREEMENT IN WRITING AND WITH APPROPRIATE COMPENSATION TO Narkweather Architects Inc.
COPYRIGHT 2016 Narkweather Architects

CITY OF RANCHO MIRAGE

PROJECT DESCRIPTION: OBSERVATORY
Rancho Mirage Public Library
SITE ADDRESS: 71–100 California 111, Rancho Mirage, CA 92270

SHEET CONTENT
ROOF FRAMING PLAN

DRAWING SCALE: 1/4" = 1'–0"

ISSUE DATE		
MONTH	DAY	YEAR
JUNE	13	2016

1	REVISION DATE:
	REVISION DATE:
	REVISION DATE:
	REVISION DATE:
	REVISION DATE:

(PLAN CHECK STAMP)
RECOMMENDED FOR APPROVAL BY: R.E.C. DATE
APPROVED BY CITY OF RANCHO MIRAGE: EXP. DATE
WILLIAM L. BURKE, CITY ENGINEER
R.C.E. 43910, EXP. 12/31/2017

DRAWING NUMBER
S3.0
SHEET # OF 51
PRIVATE REFERENCE #
CITY REFERENCE #

Bid Set - 10/07/2016

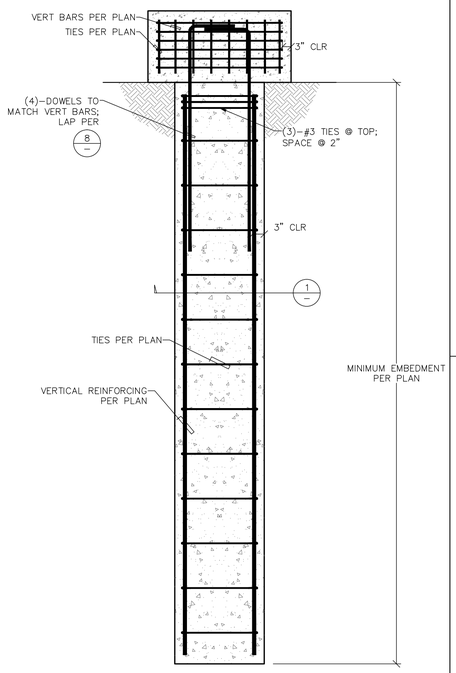

PILE FOR VIEWING PLATFORM NTS (4)

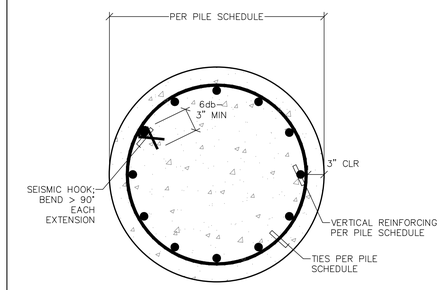

COLUMN/PILE SECTION NTS (1)

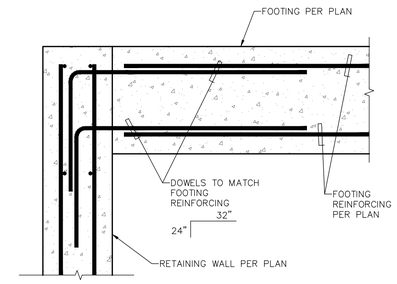

FOOTING TO WALL NTS (2)

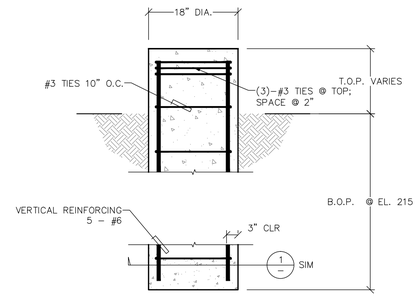

RAMP PILE NTS (3)

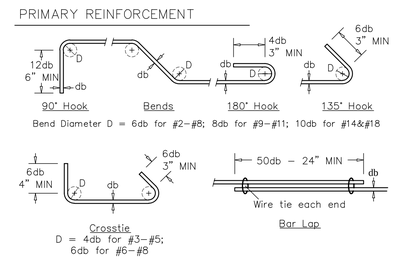

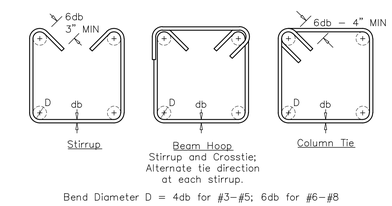

NOTE: ALL BENDS SHALL BE MADE COLD

STANDARD REINFORCEMENT BENDS AND LAPS NTS (8)

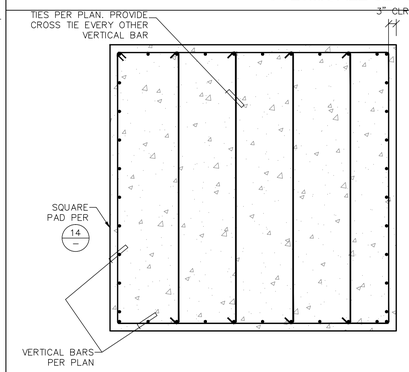

TELESCOPE PAD SECTION NTS (5)

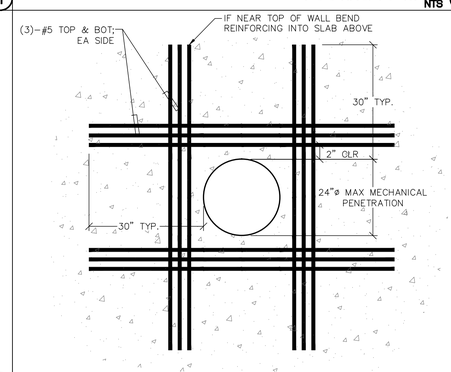

WALL MECHANICAL PENETRATION NTS (6)

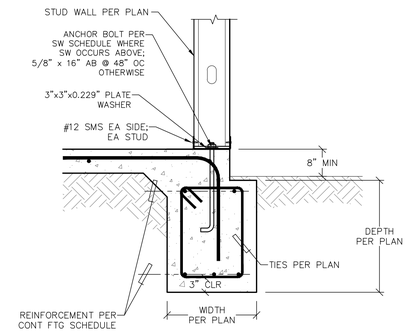

GRADE BEAM SECTION NTS (7)

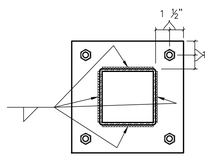

MARK	BASE PLATE		BOLTS	
	THICKNESS	WELD	DIAMETER	GRADE
A	½"	3/16"	⅝"	F1554-36
B	½"	3/16"	⅞"	F1554-36

BASE PLATE SCHEDULE NTS (9)

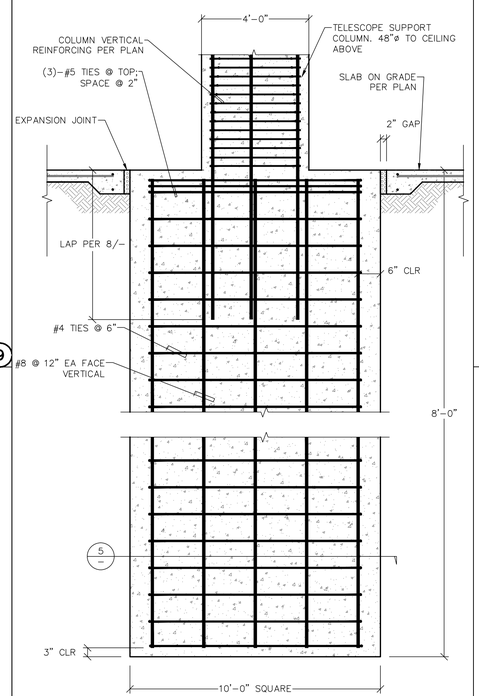

TELESCOPE SUPPORT PAD NTS (14)

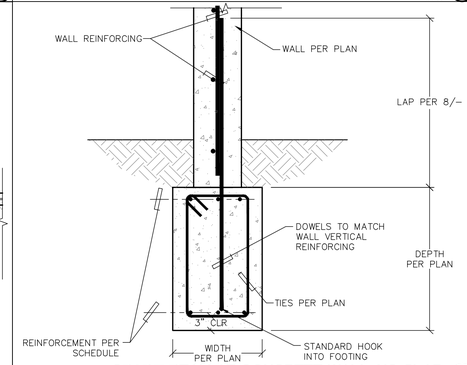

GRADE BEAM AT CONCRETE WALL-NO SLAB NTS (10)

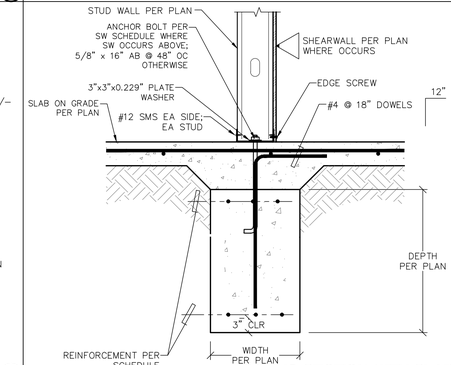

FOOTING SECTION-WITH SLAB NTS (11)

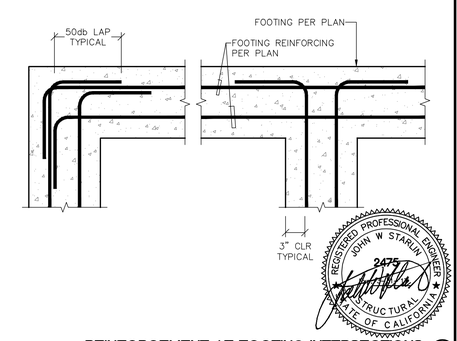

REINFORCEMENT AT FOOTING INTERSECTIONS NTS (12)

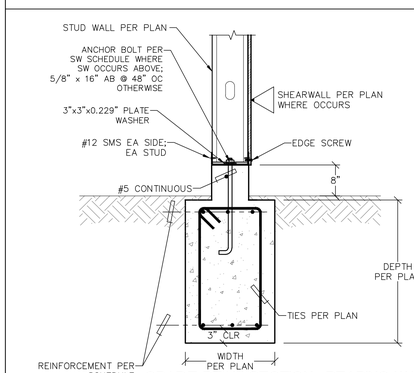

GRADE BEAM SECTION- BEARING WALL NTS (13)

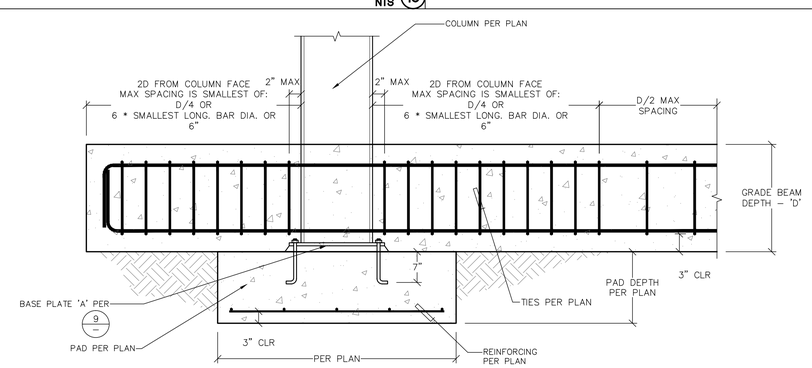

GRADE BEAM at STEEL COLUMN NTS (15)

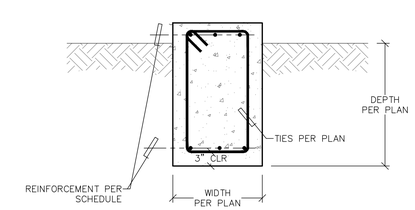

GRADE BEAM SECTION-NO SLAB NTS (16)

Narkweather ARCHITECTS INC.
73 330 HWY 111, SUITE A / PALM DESERT, CA 92260-4016
PHONE: (760) 346-4000 / E-MAIL: info@narkweather.net

OWNERSHIP OF DOCUMENTS
DRAWINGS AND SPECIFICATIONS AS INSTRUMENTS OF SERVICE ARE AND SHALL REMAIN THE PROPERTY OF THE DESIGNER WHETHER THE PROJECT FOR WHICH THEY WERE PREPARED IS EXECUTED OR NOT. THEY ARE NOT TO BE USED ON OTHER PROJECTS OR EXTENSIONS TO THIS PROJECT EXCEPT BY AGREEMENT IN WRITING AND WITH APPROPRIATE COMPENSATION TO Narkweather Architects Inc.
COPYRIGHT 2016 Narkweather Architects

CITY OF RANCHO MIRAGE

OBSERVATORY

PROJECT DESCRIPTION: Rancho Mirage Public Library

SITE ADDRESS: 71-100 California 111, Rancho Mirage, CA 92270

SHEET CONTENT

FOUNDATION DETAILS

DRAWING SCALE: NTS

ISSUE DATE		
MONTH	DAY	YEAR
JUNE	13	2016

1	REVISION DATE:
	REVISION DATE:
	REVISION DATE:
	REVISION DATE:
	REVISION DATE:

(FOR CITY USE ONLY)

RECOMMENDED FOR APPROVAL BY: R.E.E. DATE

APPROVED BY CITY OF RANCHO MIRAGE: WILLIAM A. ENG, CITY ENGINEER R.C.E. 43915 DATE

DRAWING NUMBER

S4.0

SHEET # OF 51

PRIVATE REFERENCE #

CITY REFERENCE #

REGISTERED PROFESSIONAL ENGINEER JOHN W STARLIN 2479 STRUCTURAL STATE OF CALIFORNIA

Bid Set - 10/07/2016

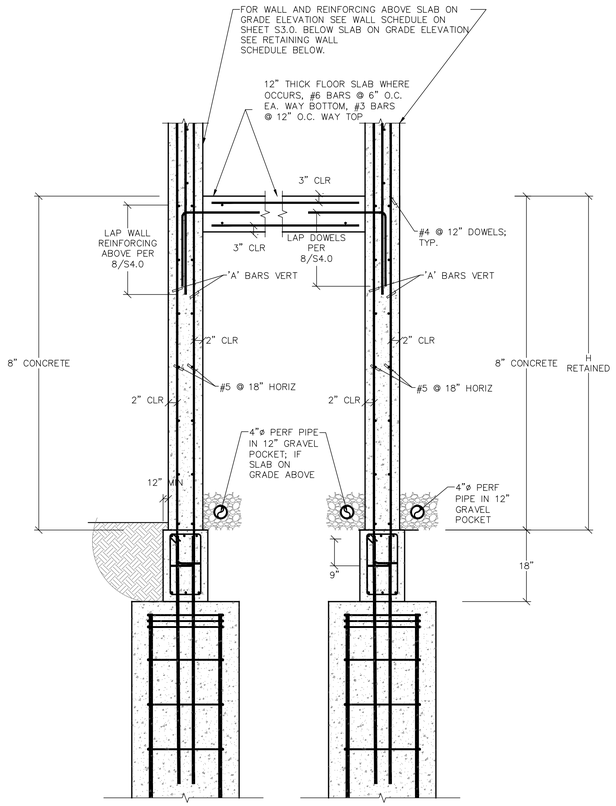

RETAINING WALL SCHEDULE						
H	T	B	K	W	A BARS	C BARS
8'-10"					#5 @ 4"	
6'-8"					#5 @ 11"	
3'-6"					#5 @ 18"	
0'-3"					#5 @ 18"	

RETAINING BOLLARD WALLS NTS (3)

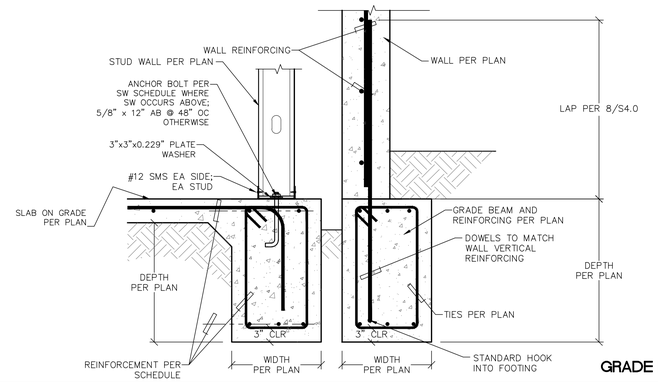

GRADE BEAM SECTION NTS (1)

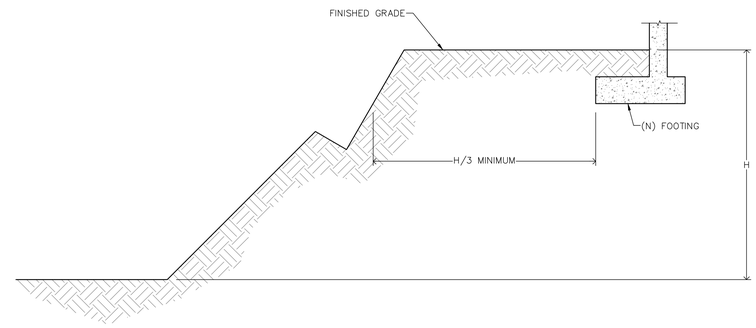

TYPICAL FOOTING TO DAYLIGHT NTS (2)

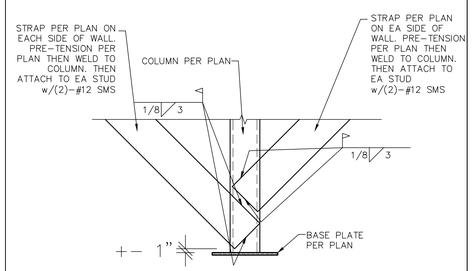

X-BRACE COLUMN NTS (4)

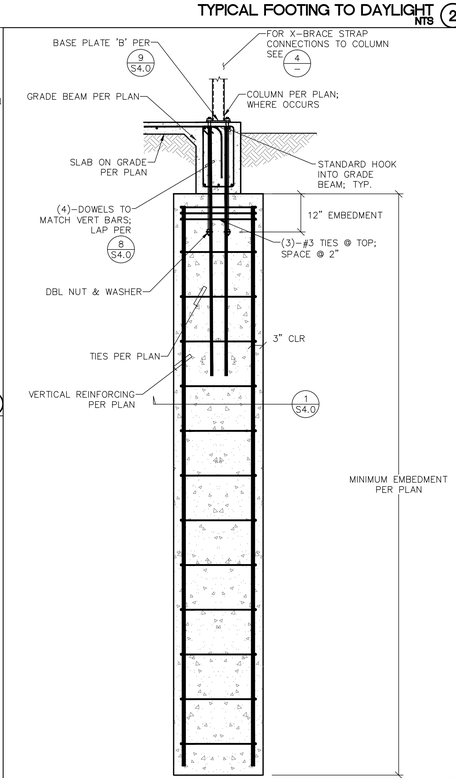

PILE SECTION NTS (9)

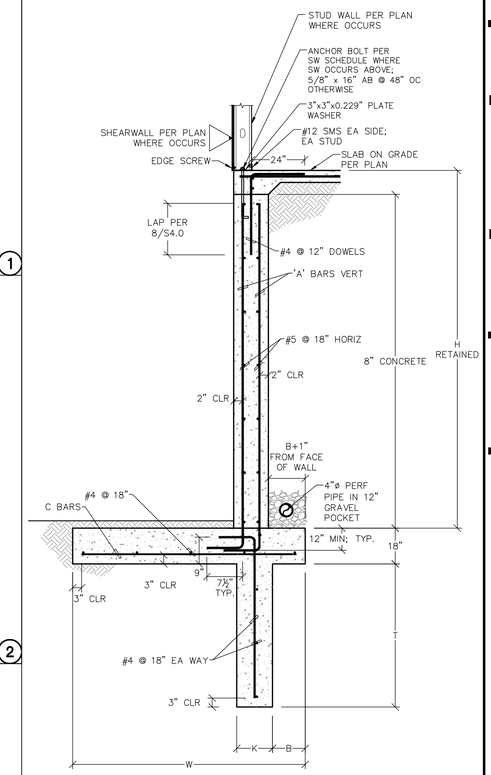

RETAINING WALL SCHEDULE						
H	T	B	K	W	A BARS	C BARS
8'-10"	34"	16"	8"	6'-3"	#5 @ 4"	#4 @ 6"
6'-8"	22"	10"	8"	4'-6"	#5 @ 11"	#4 @ 12"
3'-6"	9"	10"	8"	3'-6"	#5 @ 18"	#4 @ 16"
0'-3"	0"	8"	–	2'-0"	#5 @ 18"	#4 @ 18"

RETAINING WALL SCHEDULE NTS (5)

NTS (6)

NTS (7)

NTS (8)

REGISTERED PROFESSIONAL ENGINEER JOHN W STARLIN 2475 STRUCTURAL STATE OF CALIFORNIA

NTS (10)

Narkweather ARCHITECTS INC.
73 330 HWY 111, SUITE A / PALM DESERT, CA 92260-4016
PHONE: (760) 346-4000 / E-MAIL: info@narkweather.net

OWNERSHIP OF DOCUMENTS
DRAWINGS AND SPECIFICATIONS AS INSTRUMENTS OF SERVICE ARE AND SHALL REMAIN THE PROPERTY OF THE DESIGNER WHETHER THE PROJECT FOR WHICH THEY WERE PREPARED IS EXECUTED OR NOT. THEY ARE NOT TO BE USED ON OTHER PROJECTS OR EXTENSIONS TO THIS PROJECT EXCEPT BY AGREEMENT IN WRITING AND WITH APPROPRIATE COMPENSATION TO Narkweather Architects Inc.
COPYRIGHT 2016 Narkweather Architects

CITY OF RANCHO MIRAGE

OBSERVATORY

PROJECT DESCRIPTION: Rancho Mirage Public Library

SITE ADDRESS: 71-100 California 111, Rancho Mirage, CA 92270

SHEET CONTENT

FOUNDATION DETAILS

DRAWING SCALE: NTS

ISSUE DATE		
MONTH	DAY	YEAR
JUNE	13	2016

REVISION 1 DATE:

REVISION DATE:

REVISION DATE:

REVISION DATE:

REVISION DATE:

(PLAN CHECK ENGINEER STAMP)

RECOMMENDED FOR APPROVAL BY: R.E.C. EXP. DATE

APPROVED BY CITY OF RANCHO MIRAGE: WILLIAM A. ENG., CITY ENGINEER R.C.E. 43910 EXP. 12/31/2017 DATE

DRAWING NUMBER S4.1

SHEET # OF 51

PRIVATE REFERENCE #

CITY REFERENCE #

Bid Set - 10/07/2016

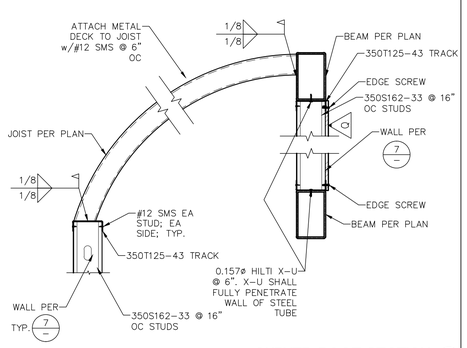

CURVED ROOF SECTION (1)
NTS

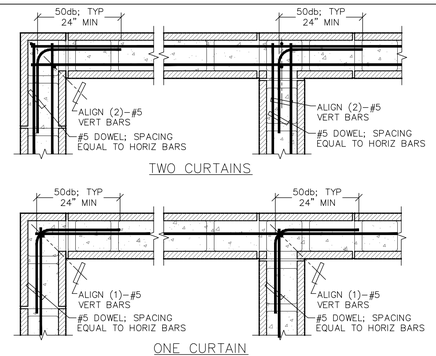

CMU_005

TYPICAL CMU WALL INTERSECTION (2)
NTS

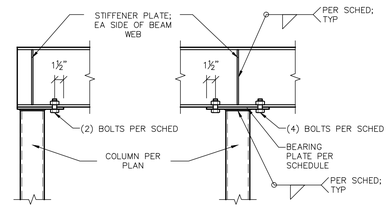

BEAM	BEARING PLATE		STIFFENER PLATE	
	THICKNESS	BOLTS	THICKNESS	WELD
W8x10	⅜"	⅞"	¼"	3/16"
W10x12	⅜"	⅞"	¼"	3/16"
W10x19	⅜"	⅞"	¼"	3/16"
W10x33	½"	⅞"	¼"	3/16"
W12x53	⅝"	⅞"	¼"	3/16"
W14x22	½"	⅞"	¼"	3/16"

WIDE FLANGE BEAM to TUBE COLUMN (3)
NTS

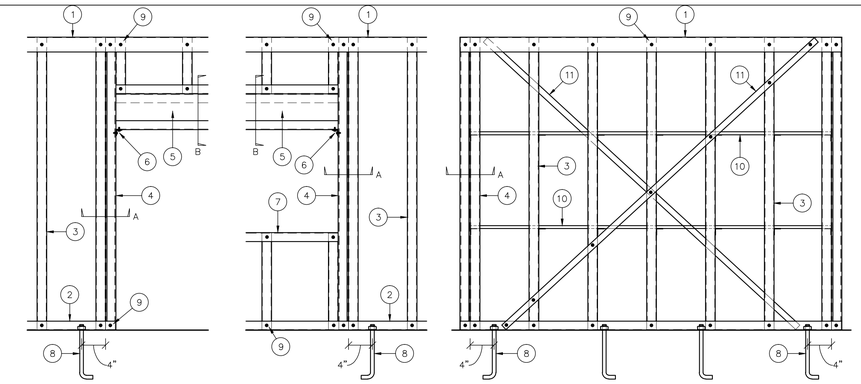

NOTES:
1. TOP TRACK PER PLAN
2. BOTTOM TRACK PER PLAN
3. STUDS PER PLAN
4. BUILT UP JAMB U.N.O. ON PLANS, SEE SECTION A-A
5. BUILT UP HEADER PER PLAN, SEE SECTION B-B
6. 14gax10" FRAMING CLIP w/ (14)-#12 SMS TO HEADER AND JAMB.
7. SILL TRACK PER PLAN
8. AB PER PLAN WHERE OCCURS
9. #12 SMS EA SIDE
10. 150U50-54 CHANNEL BRIDGING PER SECTION C-C AT 5'-0" MAX OC
11. 2"x18ga STRAP w/ #10 SMS TO TRACK & STUDS; INSTALL EACH SIDE OF WALL IN OPPOSITE DIRECTIONS. INSTALL 1 SET OF BRACES FOR EVERY 20' OF WALL, WITH A MINIMUM OF 1 SET PER WALL. (NOT APPLICABLE AT OBSERVATORY. FOR X-BRACING AT OBSERVATORY SEE PLANS AND DETAILS)

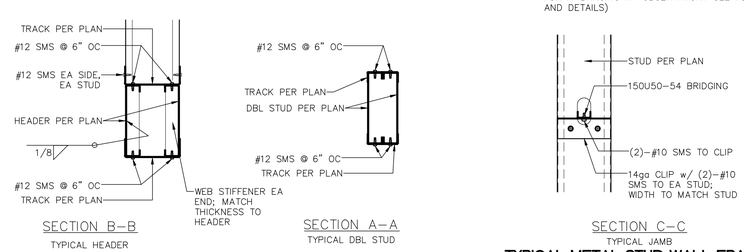

TYPICAL METAL STUD WALL FRAMING (7)
NTS

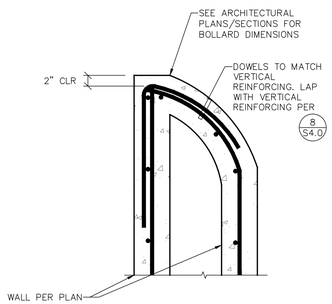

BOLLARD SECTION (4)
NTS

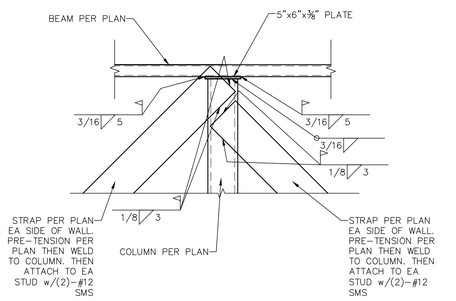

X-BRACE COLUMN (5)
NTS

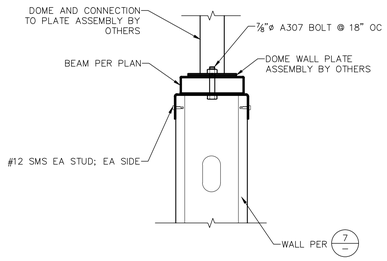

OBSERVATORY DOME CONNECTION (6)
NTS

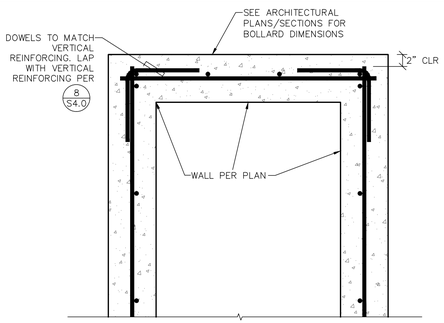

BOLLARD SECTION (8)
NTS

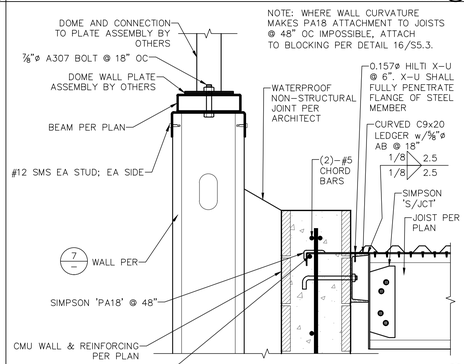

OBSERVATORY DOME CONNECTION (9)
NTS

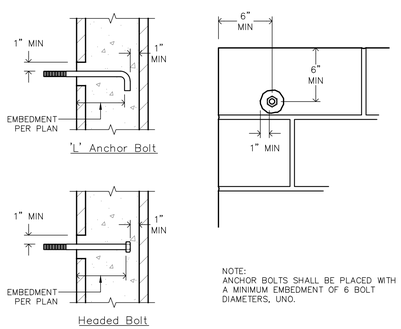

CMU_001

EMBEDDED ANCHOR BOLT PLACEMENT (10)
NTS

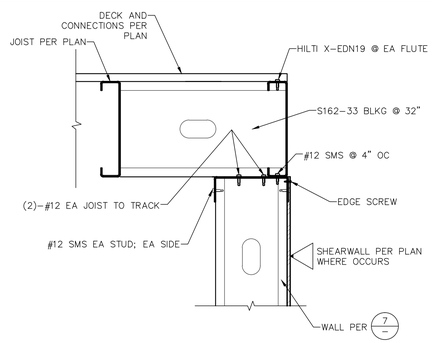

SHEAR TRANSFER (11)
NTS

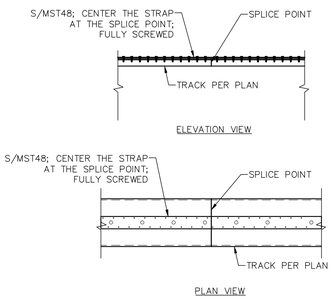

TYPICAL TOP TRACK SPLICE (12)
NTS

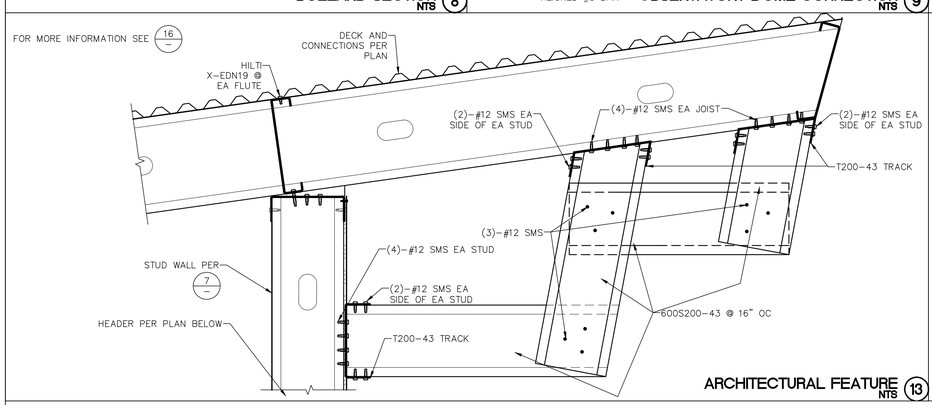

ARCHITECTURAL FEATURE (13)
NTS

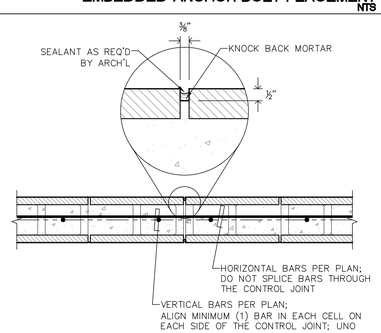

NOTE: VERTICAL CONTROL JOINTS AS SHOWN ABOVE SHALL BE SPACED A MAXIMUM OF 25'-0" ON CENTER.

CMU_002

TYPICAL CMU WALL CONTROL JOINT (14)
NTS

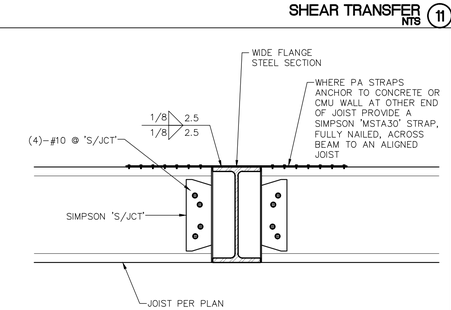

BEAM SECTION (15)
NTS

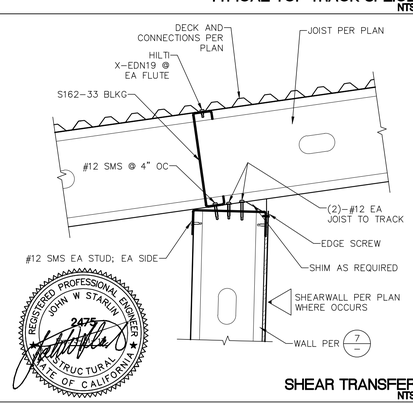

SHEAR TRANSFER (16)
NTS

Narkweather ARCHITECTS INC.
73 330 HWY 111, SUITE A / PALM DESERT, CA 92260-4016
PHONE: (760) 346-4000 / E-MAIL: info@narkweather.net

OWNERSHIP OF DOCUMENTS
DRAWINGS AND SPECIFICATIONS AS INSTRUMENTS OF SERVICE ARE AND SHALL REMAIN THE PROPERTY OF THE DESIGNER WHETHER THE PROJECT FOR WHICH THEY WERE PREPARED IS EXECUTED OR NOT. THEY ARE NOT TO BE USED ON OTHER PROJECTS OR EXTENSIONS TO THIS PROJECT EXCEPT BY AGREEMENT IN WRITING AND WITH APPROPRIATE COMPENSATION TO Narkweather Architects Inc.
COPYRIGHT 2016 Narkweather Architects

CITY OF RANCHO MIRAGE
OBSERVATORY
PROJECT DESCRIPTION: Rancho Mirage Public Library
SITE ADDRESS: 71-100 California 111, Rancho Mirage, CA 92270

SHEET CONTENT
FRAMING DETAILS

DRAWING SCALE: NTS

ISSUE DATE		
MONTH	DAY	YEAR
JUNE	13	2016

1	REVISION DATE:
	REVISION DATE:
	REVISION DATE:
	REVISION DATE:
	REVISION DATE:

(FOR CITY USE ONLY)
RECOMMENDED FOR APPROVAL BY: R.E.E. DATE
APPROVED BY CITY OF RANCHO MIRAGE: WILLIAM A. DOSS, CITY ENGINEER R.C.E. 43918 Exp. 12/31/2017 DATE

DRAWING NUMBER
S5.0
SHEET # OF 51
PRIVATE REFERENCE #
CITY REFERENCE #

Bid Set - 10/07/2016

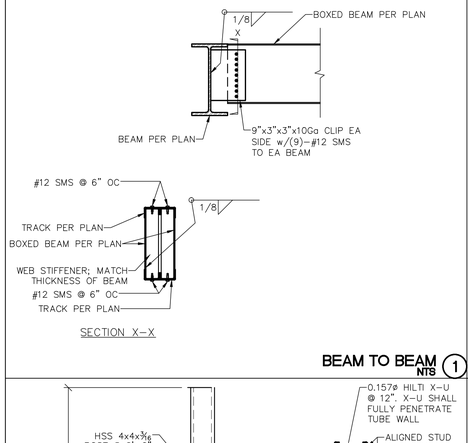

BEAM TO BEAM NTS (1)

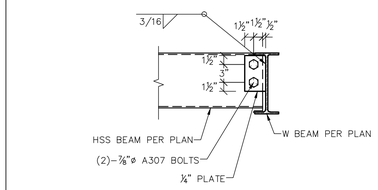

HSS BEAM TO W BEAM NTS (2)

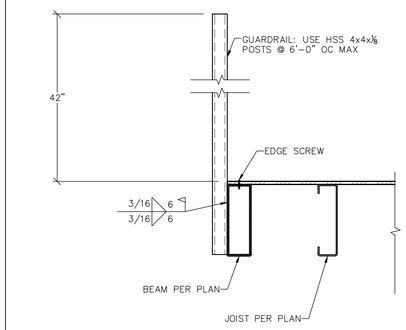

GUARDRAIL DETAIL NTS (3)

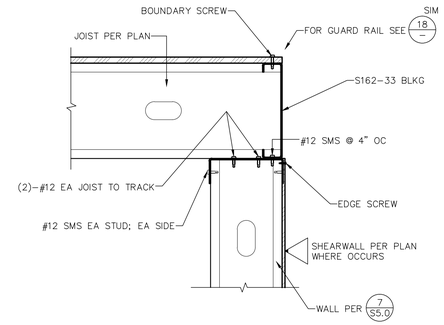

SHEAR TRANSFER NTS (4)

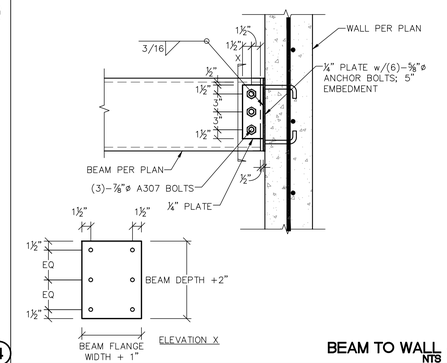

BEAM TO WALL NTS (5)

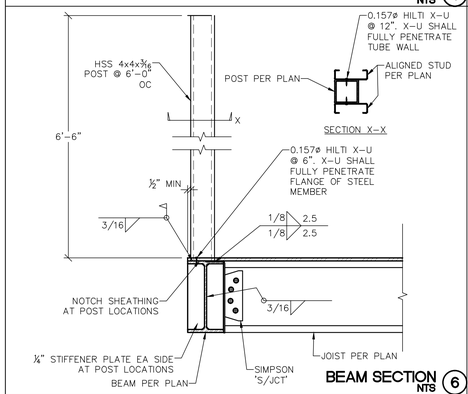

BEAM SECTION NTS (6)

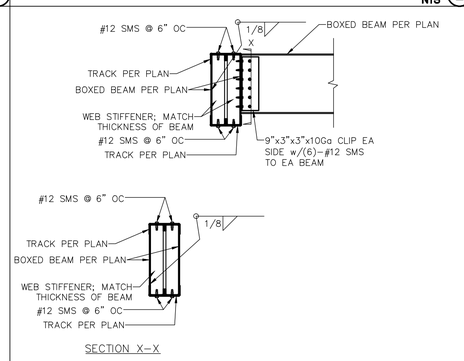

BEAM TO BEAM NTS (7)

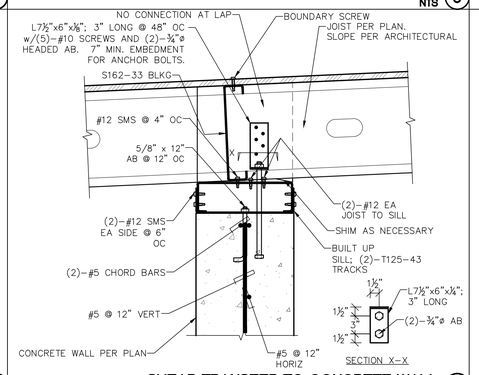

SHEAR TRANSFER TO CONCRETE WALL NTS (8)

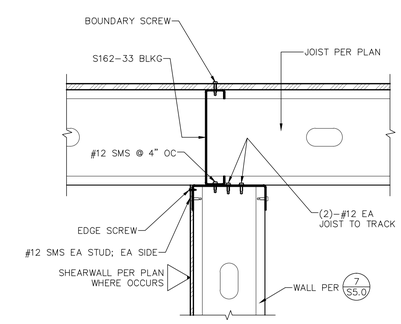

SHEAR TRANSFER NTS (9)

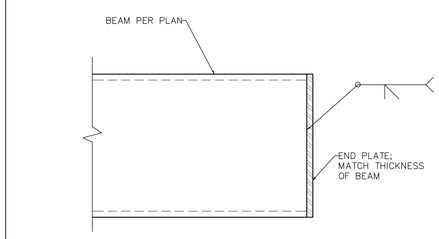

NOTE: THIS IS A TYPICAL DETAIL FOR ANY STEEL TUBE BEAMS THAT ARE TO BE CONNECTED WITH BOLTS.

TYP. BEAM END PLATE NTS (10)

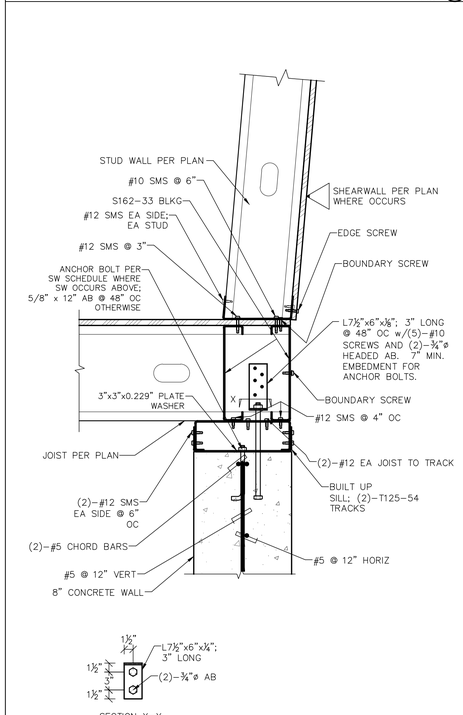

SHEAR TRANSFER TO CONCRETE WALL NTS (15)

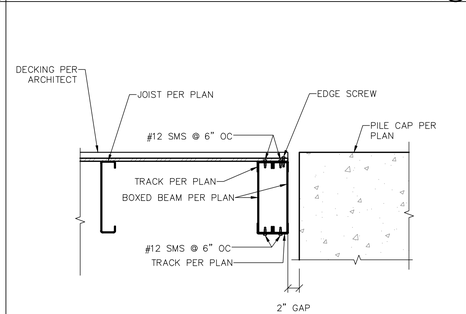

BEAM SECTION NTS (11)

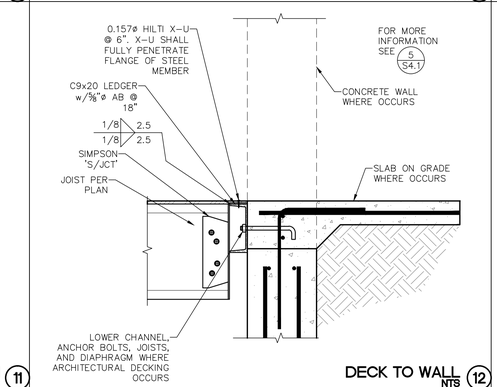

DECK TO WALL NTS (12)

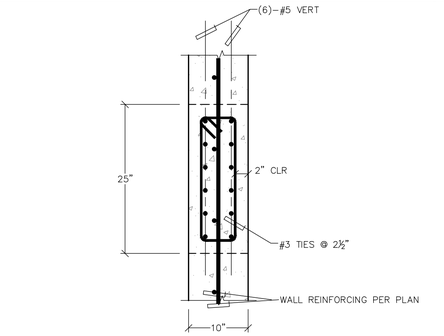

WALL PILASTER NTS (13)

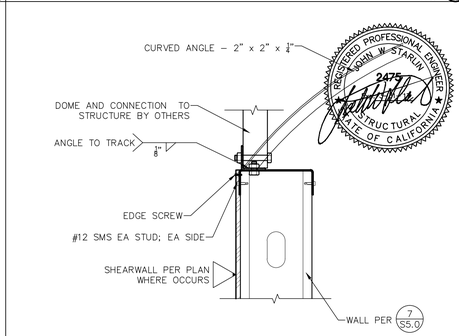

BATHROOM DOME CONNECTION NTS (14)

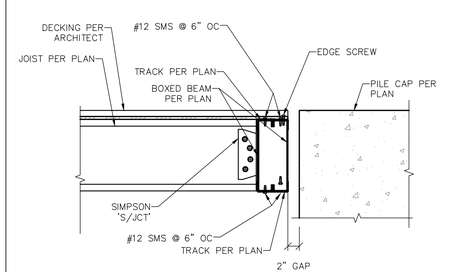

BEAM SECTION NTS (16)

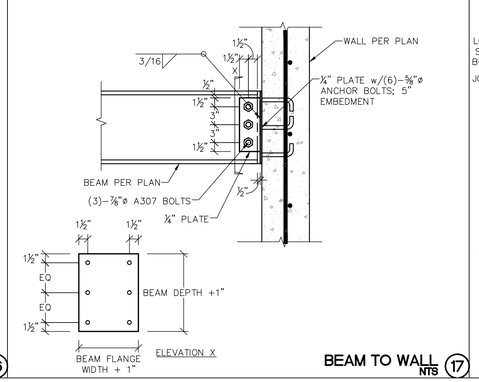

BEAM TO WALL NTS (17)

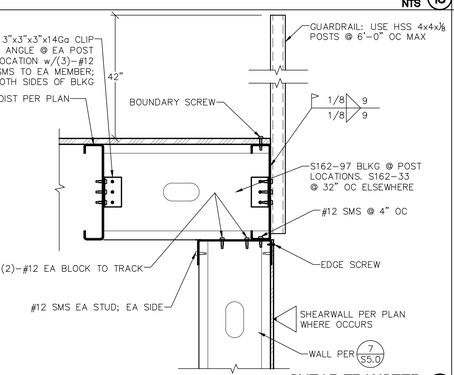

SHEAR TRANSFER NTS (18)

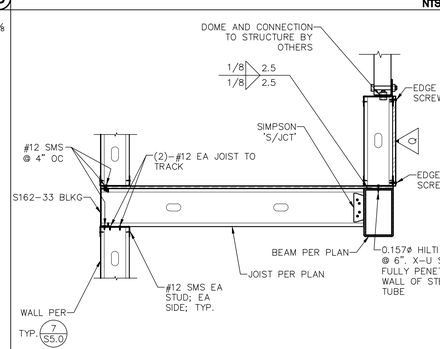

DOME TO BEAM NTS (19)

Narkweather ARCHITECTS INC.
73 330 HWY 111, SUITE A / PALM DESERT, CA 92260-4016
PHONE: (760) 346-4000 / E-MAIL: info@narkweather.net

OWNERSHIP OF DOCUMENTS
DRAWINGS AND SPECIFICATIONS AS INSTRUMENTS OF SERVICE ARE AND SHALL REMAIN THE PROPERTY OF THE DESIGNER WHETHER THE PROJECT FOR WHICH THEY WERE PREPARED IS EXECUTED OR NOT. THEY ARE NOT TO BE USED ON OTHER PROJECTS OR EXTENSIONS TO THIS PROJECT EXCEPT BY AGREEMENT IN WRITING AND WITH APPROPRIATE COMPENSATION TO Narkweather Architects Inc.
COPYRIGHT 2016 Narkweather Architects

CITY OF RANCHO MIRAGE

PROJECT DESCRIPTION: OBSERVATORY
Rancho Mirage Public Library
SITE ADDRESS: 71-100 California 111, Rancho Mirage, CA 92270

SHEET CONTENT
FRAMING DETAILS

DRAWING SCALE: NTS

ISSUE DATE		
MONTH	DAY	YEAR
JUNE	13	2016

1	REVISION DATE:
	REVISION DATE:
	REVISION DATE:
	REVISION DATE:
	REVISION DATE:

(FOR CITY USE ONLY)
RECOMMENDED FOR APPROVAL BY: R.E.C. DATE
EXP.
APPROVED BY CITY OF RANCHO MIRAGE:
WILLIAM A. DOSS, CITY ENGINEER
R.C.E. 43810 Exp. 12/31/2015 DATE

DRAWING NUMBER
S5.1
SHEET # OF 51
PRIVATE REFERENCE #
CITY REFERENCE #

Bid Set - 10/07/2016

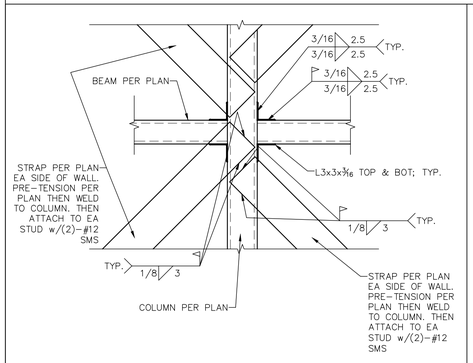

X-BRACE COLUMN NTS (1)

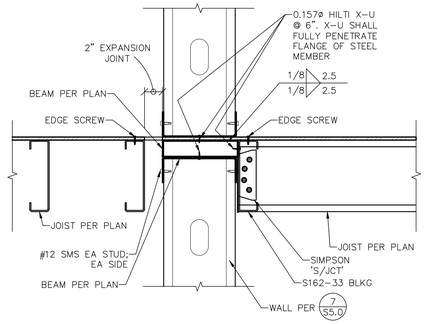

WALL SECTION NTS (2)

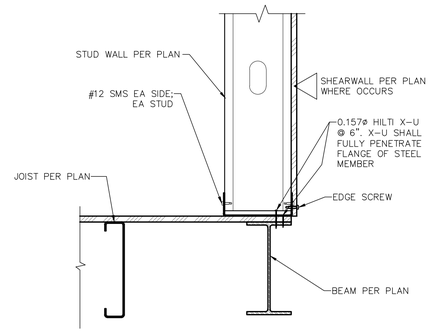

SHEAR TRANSFER TO BEAM NTS (3)

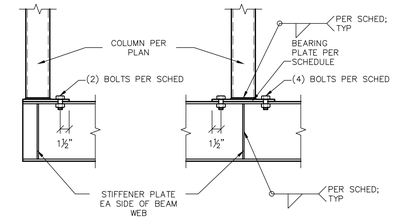

BEAM	BEARING PLATE		STIFFENER PLATE	
	THICKNESS	BOLTS	THICKNESS	WELD
W10x19	3/8"	7/8"	1/4"	3/16"
W10x33	1/2"	7/8"	1/4"	3/16"

COLUMN TO BEAM BELOW NTS (4)

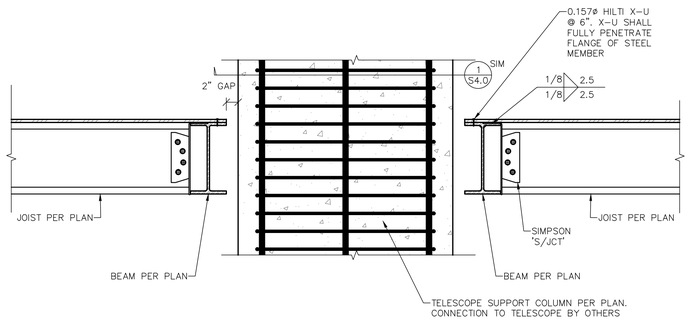

TELESCOPE SUPPORT COLUMN SECTION NTS (5)

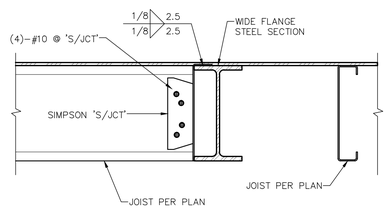

BEAM SECTION NTS (6)

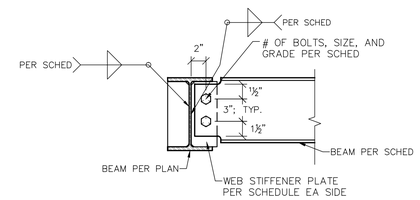

BEAM	PLATE		BOLTS		
	PLATE	WELD	#	ø	GRADE
W10x19	1/4"	3/16"	2	7/8"	A325
W10x12	1/4"	3/16"	2	7/8"	A325
W12x53	1/4"	3/16"	3	7/8"	A325

TYPICAL BEAM to BEAM CONNECTION NTS (7)

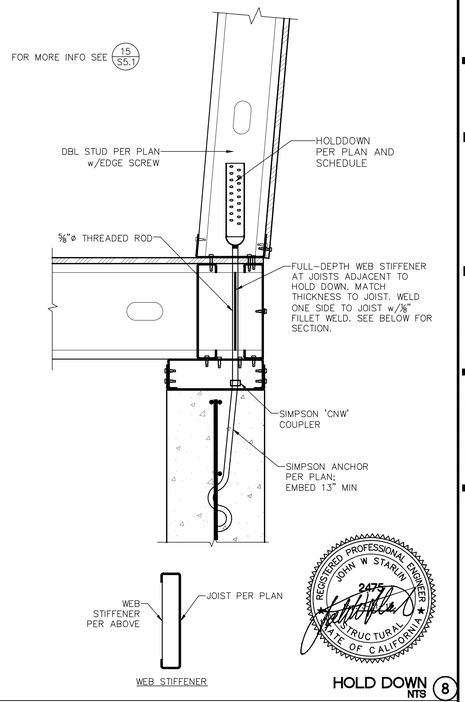

HOLD DOWN NTS (8)

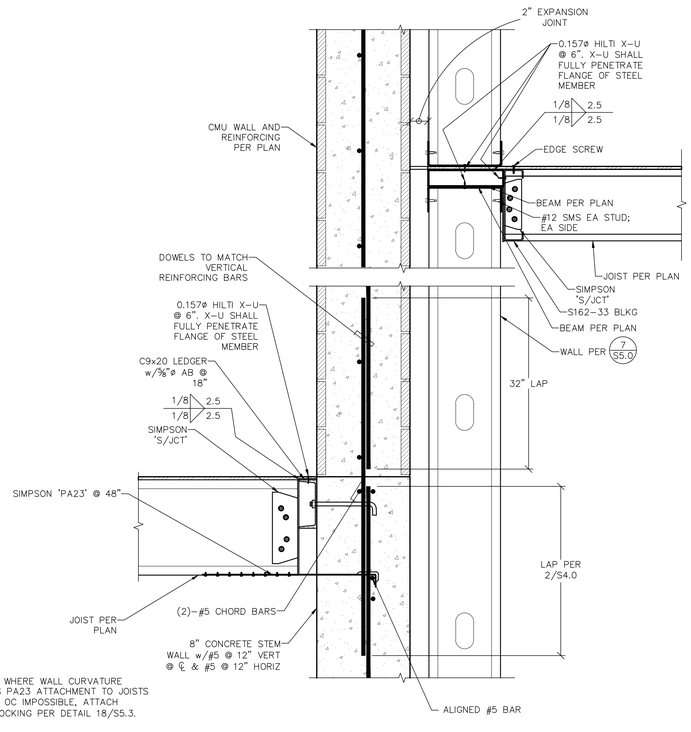

NOTE: WHERE WALL CURVATURE MAKES PA23 ATTACHMENT TO JOISTS @ 48" OC IMPOSSIBLE, ATTACH TO BLOCKING PER DETAIL 18/S5.3.

WALL SECTION NTS (10)

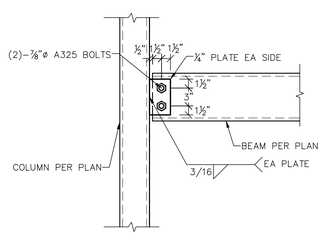

BEAM TO COLUMN NTS (9)

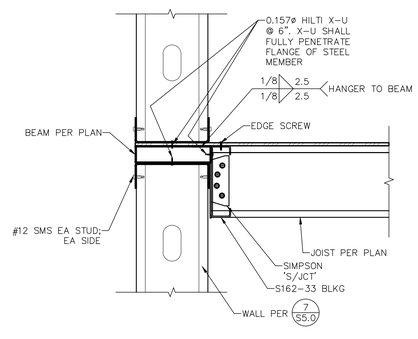

WALL SECTION NTS (11)

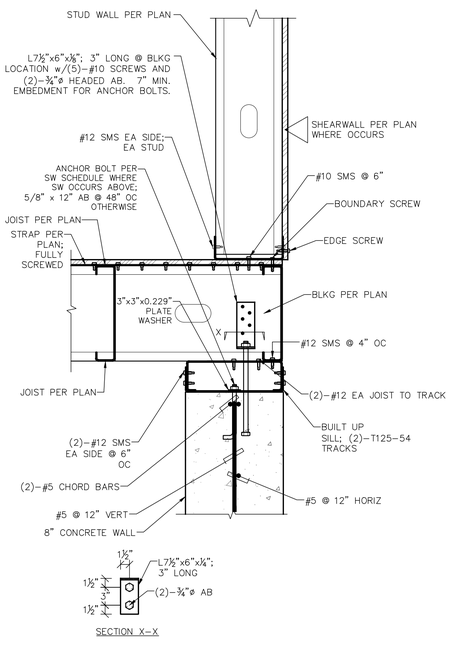

SHEAR TRANSFER NTS (12)

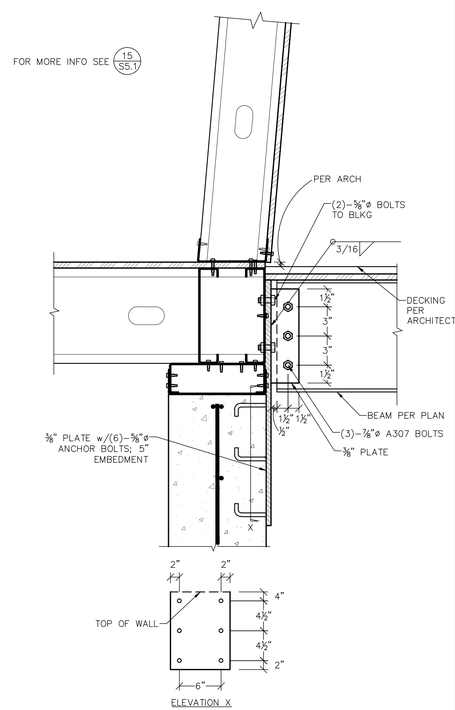

BEAM TO WALL NTS (13)

Narkweather ARCHITECTS INC.
73 330 HWY 111, SUITE A / PALM DESERT, CA 92260-4016
PHONE: (760) 346-4000 / E-MAIL: info@narkweather.net

OWNERSHIP OF DOCUMENTS
DRAWINGS AND SPECIFICATIONS AS INSTRUMENTS OF SERVICE ARE AND SHALL REMAIN THE PROPERTY OF THE DESIGNER WHETHER THE PROJECT FOR WHICH THEY WERE PREPARED IS EXECUTED OR NOT. THEY ARE NOT TO BE USED ON OTHER PROJECTS OR EXTENSIONS TO THIS PROJECT EXCEPT BY AGREEMENT IN WRITING AND WITH APPROPRIATE COMPENSATION TO Narkweather Architects Inc.
COPYRIGHT 2016 Narkweather Architects

CITY OF RANCHO MIRAGE
OBSERVATORY
PROJECT DESCRIPTION: Rancho Mirage Public Library
SITE ADDRESS: 71-100 California 111, Rancho Mirage, CA 92270

SHEET CONTENT
FRAMING DETAILS

DRAWING SCALE: NTS

ISSUE DATE

MONTH	DAY	YEAR
JUNE	13	2016

1	REVISION DATE:
	REVISION DATE:
	REVISION DATE:
	REVISION DATE:
	REVISION DATE:

(FOR CITY OFFICE STAMP)
RECOMMENDED FOR APPROVAL BY: DATE
R.E.C. EXP.
APPROVED BY CITY OF RANCHO MIRAGE: DATE
WILLIAM A. ENG., CITY ENGINEER
R.C.E. 43810, EXP. 12/31/2015

DRAWING NUMBER
S5.2
SHEET # OF 51
PRIVATE REFERENCE #
CITY REFERENCE #

Bid Set - 10/07/2016

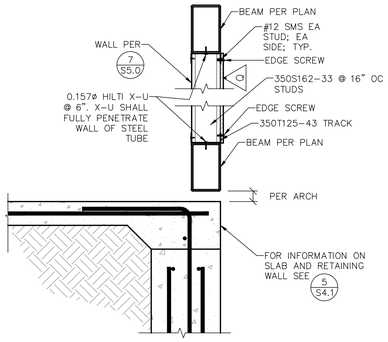

PARTIAL HEIGHT WALL NTS (1)

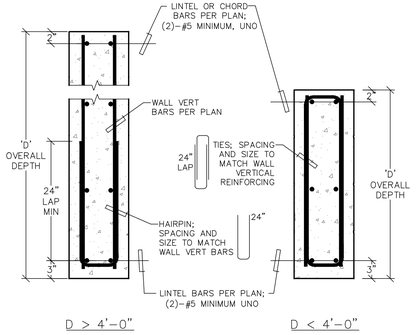

TYPICAL LINTEL at DOUBLE CURTAIN NTS (2)

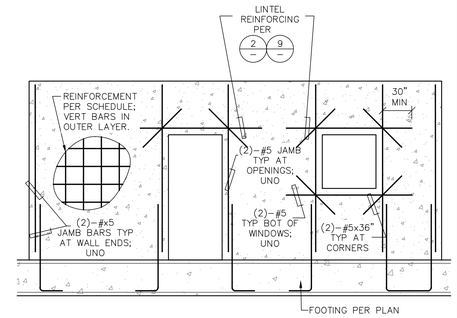

TYPICAL WALL REINFORCING NTS (3)

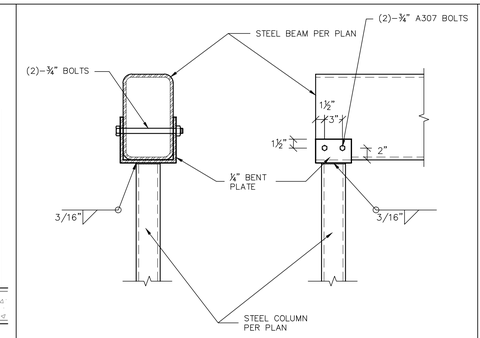

Steel Beam to Tube NTS (4)

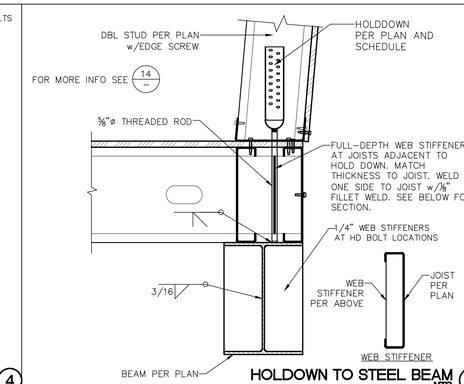

HOLDOWN TO STEEL BEAM NTS (5)

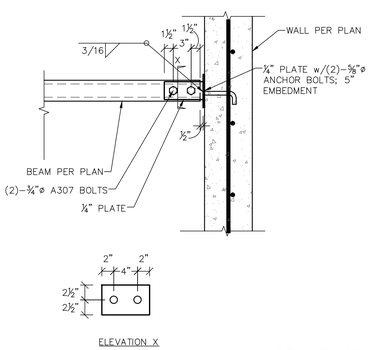

BEAM TO WALL NTS (6)

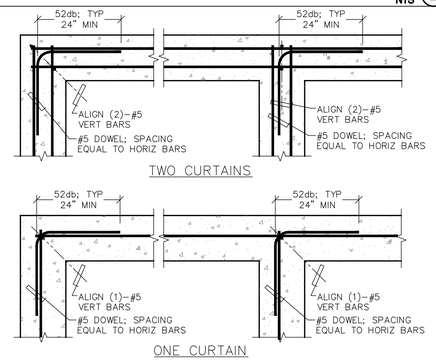

TYPICAL WALL INTERSECTION NTS (7)

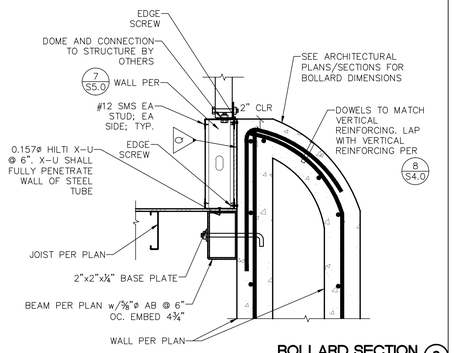

BOLLARD SECTION NTS (8)

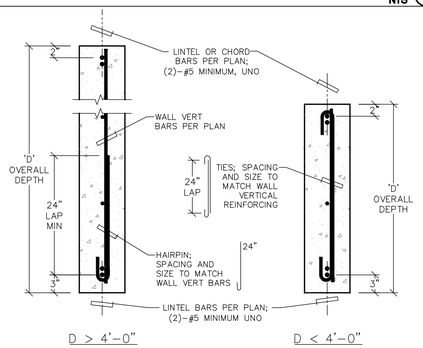

TYPICAL LINTEL at SINGLE CURTAIN NTS (9)

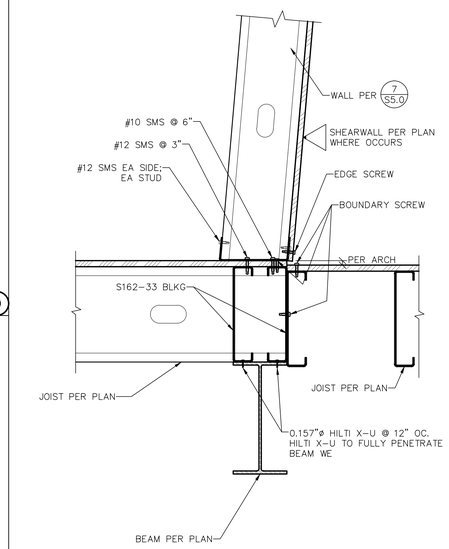

SHEAR TRANSFER NTS (14)

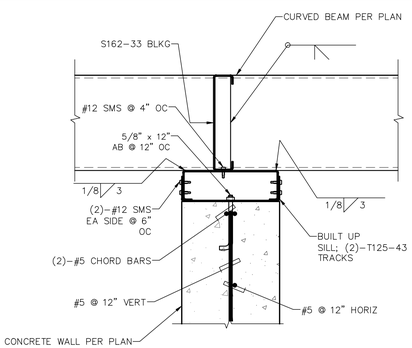

STEEL BEAM TO CONCRETE WALL NTS (10)

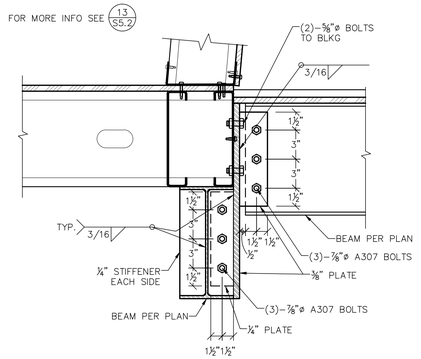

BEAM to BEAM NTS (11)

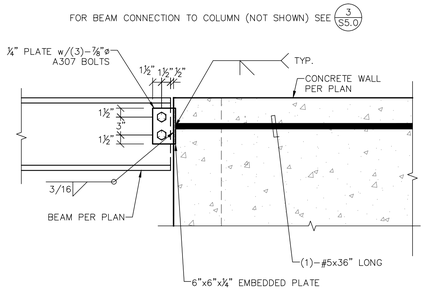

DRAG BEAM TO WALL NTS (12)

NTS (13)

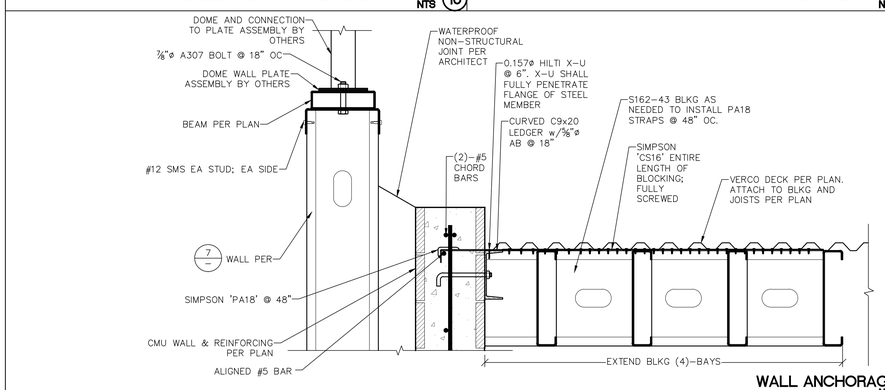

WALL ANCHORAGE NTS (16)

NOTE: FOR INFORMATION NOT SHOWN SEE 10/S5.2

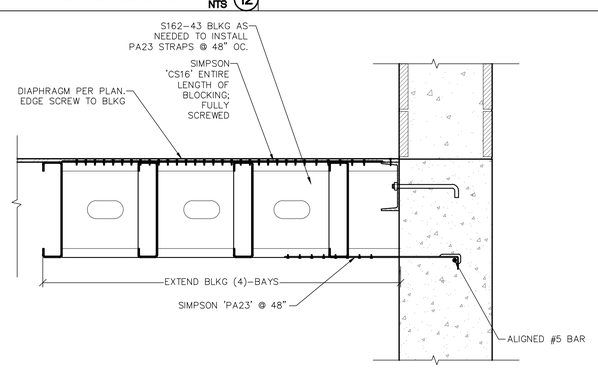

WALL ANCHORAGE NTS (18)

REGISTERED PROFESSIONAL ENGINEER JOHN W STARLIN 2475 STRUCTURAL STATE OF CALIFORNIA

NTS (19)

Narkweather ARCHITECTS INC.
73 330 HWY 111, SUITE A / PALM DESERT, CA 92260-4016
PHONE: (760) 346-4000 / E-MAIL: info@narkweather.net

OWNERSHIP OF DOCUMENTS
DRAWINGS AND SPECIFICATIONS AS INSTRUMENTS OF SERVICE ARE AND SHALL REMAIN THE PROPERTY OF THE DESIGNER WHETHER THE PROJECT FOR WHICH THEY WERE PREPARED IS EXECUTED OR NOT. THEY ARE NOT TO BE USED ON OTHER PROJECTS OR EXTENSIONS TO THIS PROJECT EXCEPT BY AGREEMENT IN WRITING AND WITH APPROPRIATE COMPENSATION TO Narkweather Architects Inc.
COPYRIGHT 2016 Narkweather Architects

CITY OF RANCHO MIRAGE

OBSERVATORY

PROJECT DESCRIPTION: Rancho Mirage Public Library

SITE ADDRESS: 71-100 California 111, Rancho Mirage, CA 92270

SHEET CONTENT

FRAMING DETAILS

DRAWING SCALE: NTS

ISSUE DATE		
MONTH	DAY	YEAR
JUNE	13	2016

1	REVISION DATE:
	REVISION DATE:
	REVISION DATE:
	REVISION DATE:
	REVISION DATE:

(FOR CITY USE ONLY)

RECOMMENDED FOR APPROVAL BY: R.E.E. DATE

APPROVED BY CITY OF RANCHO MIRAGE: WILLIAM A. DOBY, CITY ENGINEER R.C.E. 43810 Exp. 12/31/2017 DATE

DRAWING NUMBER S5.3

SHEET # OF 51

PRIVATE REFERENCE #

CITY REFERENCE #

Bid Set - 10/07/2016

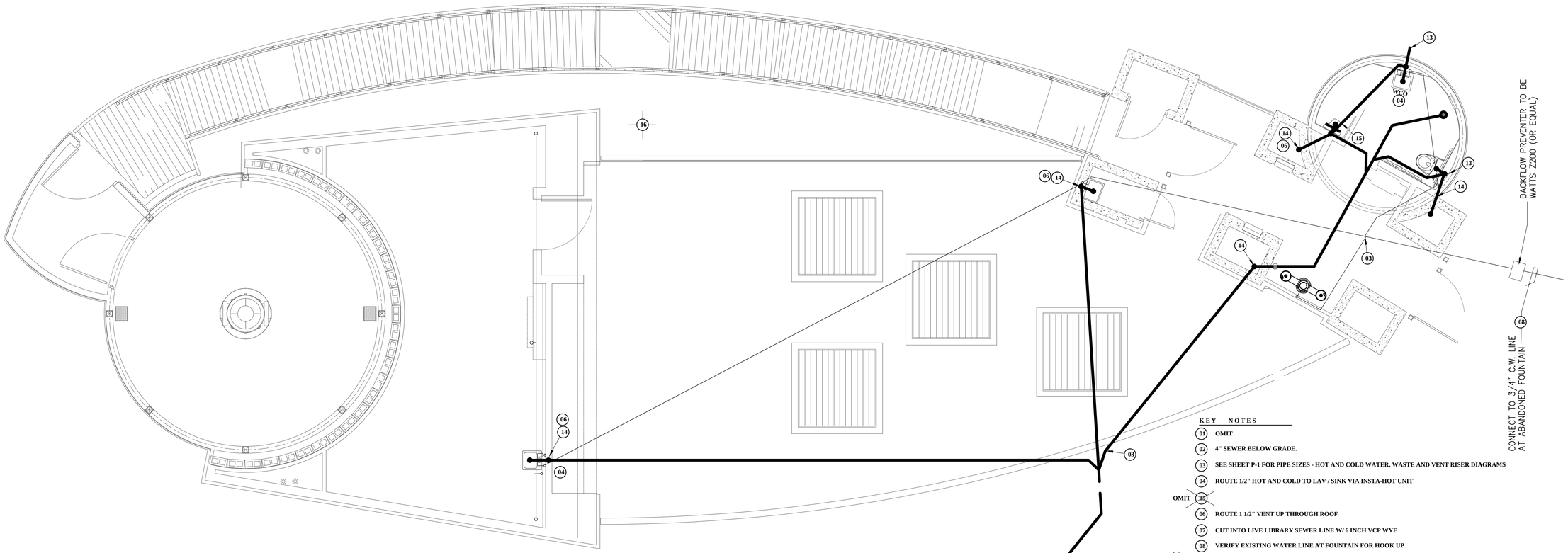

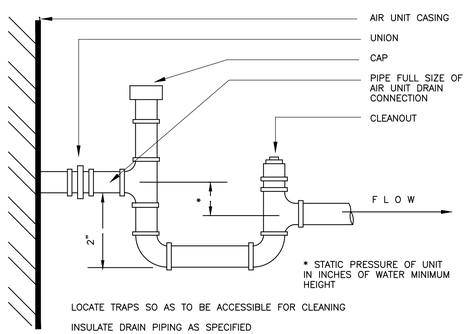

LOCATE TRAPS SO AS TO BE ACCESSIBLE FOR CLEANING

INSULATE DRAIN PIPING AS SPECIFIED

EXTEND TO EXTERIOR OF BUILDING AND DISCHARGE INTO LANDSCAPING HEDGES

MECH. UNIT CONDENSATE DISCHARGE 01

SLOPE SOIL WASTE DRAIN PIPING 3 INCHES AND SMALLER AT A GRADIENT SLOPE OF NOT LESS THAN 1/4" P.L.F. UNLESS SPECIFICALLY NOTED ON THE DRAWINGS. SLOPE SOIL WASTE DRAIN PIPING 4 INCHES AND LARGER AT A GRADIENT SLOPE OF NOT LESS THAN 1/8" PER FT.

VERIFY INVERT ELEVATIONS OF SEWERS TO WHICH WASTE LINES ARE TO BE CONNECTED BEFORE MAKING UP OR INSTALLATION OF LINES.

N O T E :
CHANGES IN DIRECTION OF DRAINAGE PIPING SHALL BE MADE BY THE APPROPRIATE USE OF APPROVED FITTINGS AND SHALL BE OF ANGLES PRESENTED BY A ONE-SIXTEENTH (1/16) BEND, (1/8) BEND, OR ONE SIXTH (1/6) BEND, OR OTHER APPROVED FITTINGS OF EQUIVALENT SWEEP.

2% SLOPE (UND)

KEY NOTES

01 OMIT

02 4" SEWER BELOW GRADE.

03 SEE SHEET P-1 FOR PIPE SIZES - HOT AND COLD WATER, WASTE AND VENT RISER DIAGRAMS

04 ROUTE 1/2" HOT AND COLD TO LAV / SINK VIA INSTA-HOT UNIT

OMIT 05

06 ROUTE 1 1/2" VENT UP THROUGH ROOF

07 CUT INTO LIVE LIBRARY SEWER LINE W/ 6 INCH VCP WYE

08 VERIFY EXISTING WATER LINE AT FOUNTAIN FOR HOOK UP

09 EXISTING CVWD 12 INCH DIP WATER

OMIT 10

OMIT 11

OMIT 12

13 VENT SHALL TERMINATE NOT LESS THAN ONE FOOT FROM WALL FACE AND NOT LESS THAN TEN FEET FROM DOOR, OPENING, AIR INTAKE, OR VENT SHAFT WITH MINIMUM SIZE OF 2 INCHES AND SLOPING UP AT 1/4" EXTERIOR PORTION TO BE COPPER.

14 EACH VENT SHALL TERMINATE NOT LESS THAN SIX INCHES ABOVE THE ROOF NOR LESS THAN ONE FOOT FROM ANY VERTICAL SURFACE AND NOT LESS THAN TEN FEET FROM OR AT LEAST THREE FEET ABOVE ANY WINDOW, DOOR, OPENING, AIR INTAKE OR VENT SHAFT. MIN. VENT SIZE TO BE 2 INCHES.

15 CPC 403.3.1.1 NONWATER URINAL REQUIRES ONE WATER SUPPLIED FIXTURE UNIT INSTALLED UPSTREAM ON SAME DRAIN LINE TO FACILITATE LINE FLOW.

16 TERMINATION POINT AT MECHANICAL UNIT CONDENSATION LINE. CONDENSATE LINE TO DUMP AT LANDSCAPING HEDGES

Narkweather
ARCHITECTS INC.
73 330 HWY 111, SUITE A / PALM DESERT, CA 92260-4016
PHONE: (760) 346-4090 / E-MAIL: info@narkweather.net

OWNERSHIP OF DOCUMENTS
DRAWINGS AND SPECIFICATIONS AS INSTRUMENTS OF SERVICE ARE AND SHALL REMAIN THE PROPERTY OF THE DESIGNER WHETHER THE PROJECT FOR WHICH THEY WERE PREPARED IS EXECUTED OR NOT. THEY ARE NOT TO BE USED ON OTHER PROJECTS OR EXTENSIONS TO THIS PROJECT EXCEPT BY AGREEMENT IN WRITING AND WITH APPROPRIATE COMPENSATION TO Narkweather Architects Inc.
COPYRIGHT 2016 Narkweather Architects

CITY OF RANCHO MIRAGE

PROJECT DESCRIPTION: O B S E R V A T O R Y
Rancho Mirage Public Library

SITE ADDRESS: 71-100 California 111, Rancho Mirage, CA 92270

SHEET CONTENT

PLUMBING PLAN

DRAWING SCALE:
SCALE: 1/4" = 1'-0"

ISSUE DATE		
MONTH	DAY	YEAR
SEPT.	29	2016

1	REVISION DATE:
2	REVISION DATE:
	REVISION DATE:
	REVISION DATE:
	REVISION DATE:

(FOR CITY ENGINEER STAMP)

RECOMMENDED FOR APPROVAL BY:
LELAND E. COLE 9/27/16
R.C.E. 47159 EXP. 12/31/17 DATE
APPROVED BY CITY OF RANCHO MIRAGE:
WILLIAM A. ENOS, CITY ENGINEER DATE
R.C.E. 43910, EXP. 6/30/2017

DRAWING NUMBER
P1
SHEET # 42 OF 56
PRIVATE REFERENCE #
CITY REFERENCE #

Bid Set - 10/07/2016

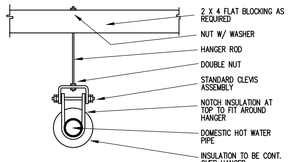

NOTE: ALL PIPING, HANGERS, DUCTS, AND CONDUITS EXPOSED UNDER OPEN FLOORS AND DECKS TO BE PAINTED FLAT BLACK

PIPE HANGER ASSEMBLY 02

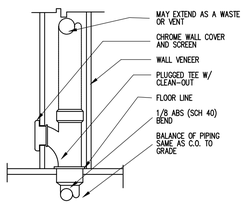

WALL CLEANOUT DTL. 03

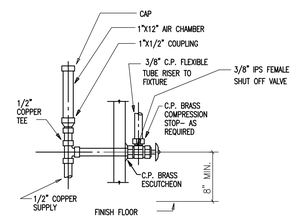

SHUT-OFF VALVE DTL. 04

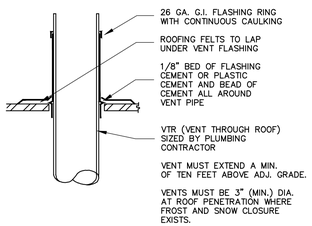

VENT THRU ROOF 05

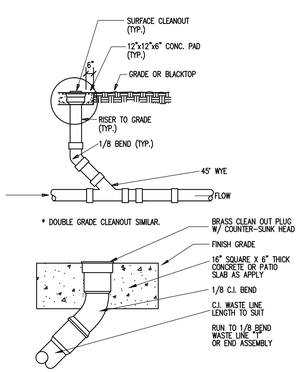

FLUSH YARD CLEAN OUT 06

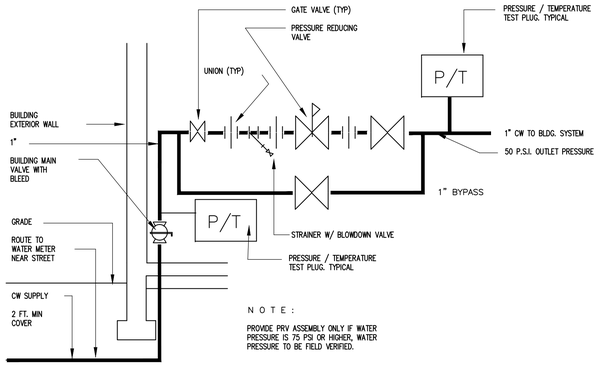

NOTE:

PROVIDE PRV ASSEMBLY ONLY IF WATER PRESSURE IS 75 PSI OR HIGHER, WATER PRESSURE TO BE FIELD VERIFIED.

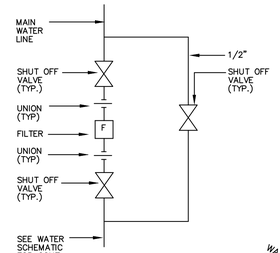

WATER SUPPLY BUILDING ENTRANCE 01

SCHEDULE OF PLUMBING FIXTURES AND SPECIALTY EQUIPMENT

MARK	DESCRIPTION	COMPONENTS TO BE PROVIDED BY PLBG. CONTR.	PROTOTYPE: BASIC FIXTURE DESCRIPTION	PROTOTYPE: TRIM AND ACCESSORIES	FIX. CONNECTION SIZE: DRAIN WASTE	VENT	H.W.	C.W.	GRADE	REMARKS	FIXTURE COUNT
P-1	WATER CLOSET WALL MOUNTED 1.1 GPF AFWALL	COMPLETE UNIT WITH ALL TRIM & ACCESSORIES	AMERICAN STANDARD 3.1 GPF AFWALL MILLENIUM SYSTEM W/ MANUAL FLUSH VALVE 2859111.020 / 79156027451	COLOR: WHITE / SEAT: 5905.110 CARRIER FITTING (BY GENERAL CONTRACTOR) PROVIDE PROPER ANCHORAGE BACKBAG FRAMED IN WALL	4"	2"	–	1"		T-1/2" TOP SPUD, CAULK AT WALL W/ WHITE SILICONE SEALANT. FLUSH HANDLE ON OPEN SIDE (REQ.)	2.0
P-2	LAVATORY	COMPLETE UNIT	ELKAY WCL19233GSDC WHEELCHAIR WASHUP LAVATORY SINK	ELKAY LK2325BH5 GOOSENECK SPOUT CONNECT TO INSTA-HOT ASSEMBLY FOR HOT WATER	1.5"	2"	1/2"	1/2"			1.0
P-3	SERVICE SINK	COMPLETE UNIT WITH ALL TRIM & ACCESSORIES	ELKAY ESE20201Q 20 X 20 SINGLE BASIN S.S. SINK	DELTA 26C3945 GOOSENECK SPOUT CONNECT TO INSTA-HOT ASSEMBLY FOR HOT WATER	2"	2"		1/2"		PROVIDE G.C. W/ TEMPLATE FOR COUNTER TOP. SET & INSTALL IN SEALANT UNDER RIM AS PER MFG'S RECOMMENDATIONS	2.0
P-4	WALL HYDRANT HOSE BIBB	COMPLETE UNIT WITH ALL TRIM & ACCESSORIES	WATTS HY-330 DRAINING, FREEZELESS, YARD HYDRANT W/ VAC. BREAKER & LOCKING COVER	LOOSE KEY OPERATOR, 3/4" HOSE, THREAD CHROME FINISH	–	–	–	3/4"		MOUNT IN EXTERIOR WALL 16" ABOVE FIN. GRADE	2.0
P-5	MOP SINK	COMPLETE UNIT WITH ALL TRIM & ACCESSORIES	ELKAY FIAT MOLDED STONE 24 X 24	BIBCOCK D012 SINGLE HANDLE COLD WATER TAP FAUCET MOUNTED 30 INCHES ABOVE SINK RIM	2"	2"	–	1/2"		TRAP STANDARD W/ STRAINER 30 INCH LONG HOSE FIAT 889-CC MOP HANGER	2.0
P-6	FLOOR DRAIN	TRAP SEAL PRIMER TUBING TO TRAP ASSEMBLY	MIFAB MODEL # F113-4-1F110	7 INCH DIAMETER CAST IRON BODY. AND ROUND, ADJUSTABLE. NICKEL BRONZE STRAINER WITH TRAP PRIMER TAPPING AND PLUG	3"	2"	1/2"	1/2"			0
P-7	DRINKING STATION	SHUT OFF VALVES COPPER TUBE CONNECT	ELKAY MODEL # LK4420BF1UDB	TRAP AND SERVICE STOP PROVIDED BY PLUMBING CONTRACTOR	1.5"	–	–	3/8"			0
P-8	URINAL	SHUT OFF VALVES COPPER TUBE CONNECT	ZURN Z5795 WATERLESS W/ INTEGRAL TRAP AND DRAIN LINE CONNECTION	ZURN GREEN SEALANT AND GREEN SEALANT BOTTLES BATTERY OPERABLE FLUSH WAX FREE SEAL	1.5"	–	–	1/2"			0

PIPE SCHEDULE

DESCRIPTION	SIZE	MATERIAL	FITTINGS	REMARKS
HOUSE DRAIN SANITARY	ALL	A.B.S. PLASTIC ASTM D2661		
SANITARY VENT	ALL	A.B.S. PLASTIC ASTM D2661		
DOMESTIC COLD WATER	ALL	COPPER "L" HARD OR TYPE "K" ASTM B-88	SCREWED WROT. 95-5 SOLDER JOINTS	DI-ELECTRIC UNIONS AT ALL IRON-COPPER CONNECTIONS
DOMESTIC HOT WATER	ALL	COPPER "L" HARD ASTM B-88	SCREWED WROT. 95-5 SOLDER JOINTS	DI-ELECTRIC UNIONS AT ALL IRON-COPPER CONNECTIONS
MISC. PIPING	ALL	COPPER "L" HARD ASTM B-88	SCREWED WROT. 95-5 SOLDER JOINTS	

* ALL MINIMUM SPECIFICATIONS FOR THESE MATERIALS UNLESS OTHERWISE NOTED.

NO POTABLE WATER PIPING EXCEPT PEX TO BE INSTALLED UNDER SLAB

WATER PIPING ABOVE GROUND TO BE TYPE "L" CONFORMING TO ASTM B-88-83
WATER PIPING BELOW GROUND TO BE TYPE "K" SOFT COPPER CONFORMING TO ASTM B-88-83

HOT AND COLD WATER PIPE SIZING

PIPE SIZE	MAX. G.P.M.	VEL F/S	MAX. F.U.'S
1/2"	2.25	3	3
3/4"	6	3	7
1.0"	12	4	16
1.25"	21	5	32
1.5"	34	6	63
2.0"	71	7	230
2.5"	126	8	511
3.0"	275	11.5	

ABOVE PIPE SIZES ARE BASED ON TYPE "L" COPPER AND A MAXIMUM LOSS OF 5.60 PSI PER 100 FEET OF PIPE FOR THE MAIN SUPPLY PIPING AND RISERS. ALL BRANCH PIPING TO AN INDIVIDUAL FIXTURE SHALL BE LIMITED TO A VELOCITY NOT TO EXCEED 4 FT./SEC.

PLUMBING NOTES

01 ALL WORK SHALL BE INSTALLED IN CONFORMITY WITH LOCAL CODES AND PROJECT SPECIFICATIONS

02 HOT WATER SHALL BE LEFT FITTING AT ALL FAUCETS

03 SANITARY SEWER PIPING SHALL BE INSTALLED TO RUN AT 1/4" PER FT. SLOPE UNLESS OTHERWISE NOTED

04 DOMESTIC COLD WATER PIPING SHALL BE INSULATED WITH 1/2" FIBERGLASS PIPE INSULATION. HOT WATER PIPE SHALL BE INSULATED WITH 1" FIBERGLASS PIPE INSULATION.

05 SHOULD ANY EXISTING UTILITIES BE ABANDONED, THEY SHALL BE PROPERLY DISCONNECTED, PLUGGED, OR CAPPED AS REQUIRED BY CODE AND SOUND CONSTRUCTION PRACTICES.

06 SOLDER AND FLUX HAVING A LEAD CONTENT IN EXCESS OF 2/10 OF ONE PERCENT SHALL NOT BE USED IN THE INSTALLATION OR REPAIR OF ANY PLUMBING PROVIDING WATER FOR HUMAN CONSUMPTION WHICH ARE CONNECTED TO PUBLIC WATER SYSTEM.

07 PROVIDE AND INSTALL SHUT-OFF VALVES AT EACH FIXTURE AND PIECE OF EQUIPMENT REQUIRING WATER.

08 COORDINATE ALL PLUMBING WORK WITH OTHER TRADES

09 SPECIAL PRECAUTIONS MUST BE TAKEN TO INSURE THAT ALL PENETRATIONS THROUGH FLOOR SLABS ARE CLOSELY COORDINATED WITH THE WALL LOCATIONS (AS VERY TIGHT TOLERANCES EXIST).

10 DOMESTIC HOT WATER PIPING ABOVE INSULATED CEILING SHALL BE EQUIPED WITH A HEAT MAINTENANCE CABLE (120 DEGREES F.) INSTALLED INSIDE THE PIPE INSULATION. THE CABLE SHALL HAVE SELF TERMINATING END CAPS INSTALLED AT ALL PIPE DROPS TO FIXTURES. PROTOTYPE MANUFACTURER = THERMON.

11 EQUIP LAVATORY FAUCETS WITH FLOW CONTROL DEVICE SET NOT TO EXCEED 2.75 GALLONS PER MIN.

12 WATER CLOSETS SHALL NOT EXCEED 1.5 GALLONS PER FLUSH (WATER CONSERVATION LAWS)

13 AN APPROVED TYPE PRESSURE REGULATOR PRECEDED BY AN ADEQUATE STRAINER SHALL BE INSTALLED AND THE PRESSURE REDUCED NOT TO EXCEED (80) P.S.I. OR LESS.

14 THE CONTRACTOR SHALL OBTAIN A WATER PRESSURE FIELD TEST AT THE SITE OF CONSTRUCTION OR AS CLOSE TO THE SITE AS POSSIBLE. A PERMIT WILL NOT BE ISSUED UNTIL DONE.

15 Contractor may use Schedule 40 ABS DWV pipe for all soil, waste and vent, piping where permitted by local codes. Where ABS piping is not permitted by local codes, use standard weight cast iron piping.

16 Contractor to coordinate w/local Power Co. for installation of gas mtr. And Contractor to provide all service lines from meter to gas equipment in building.

17 For exact verification of existing sewer P.O.C., waste and service water locations, see Site/Grading Plans.

18 Provide shut-off ball valves on all equipment and stop cocks in hot and cold water piping to all plumbing fixtures.

19 All work shall be done in accordance with these plans and specifications.

20 All work shall be performed w/the latest industry accepted practices.

21 Plumbing Contractor shall furnish all equipment, materials, labor, ETC., whether shown on these plans or not, necessary to provide a complete, workable, code-approved plumbing system.

22 All lavatories and sinks shall come complete w/necessary trim, P-trap, and tail piece connections.

23 Use AP.D and 6"/hr. for 15 min. duration to size drain

24 Plumbing Contractor to coordinate all lines and vents with relief vents and mechanical equipment.

25 Where water and sewer pipes are run in the same trench:
a. The bottom of the water pipe at all points shall be at least 12" above the top of the sewer.
b. The water pipe shall be placed on a solid shelf excavated at one side of the common trench.

26 All condensate lines shall be trapped and vented at mechanical equip. & run to & connect at location shown on plan.

27 All condensate lines shall be sized in accordance with Manufacturer's specification, but in no case less than 3/4" copper.

28 All condensate lines are to slope at 1/4"/foot minimum and terminate 1" minimum above approved floor sink.

29 All pipes to be sloped min. 1/4"/FT. for pos. drainage.

30 Bldg. sewer clean-outs shall be installed in intervals not to exceed 100' in a straight line.

31 All water piping below grade shall be Type "L" soft tempered copper and all water piping above grade shall be Type "L" hard tempered copper.

32 Install insulation on all hot water piping above grade.

33 Elevation of all floor drains shall be held 1/2" below finish tile floor.

34 Provide all condensate piping for roof top unit and all equipment discharging condensate.

35 Building sewer materials per Chapter 2 Section 1103 UPC.

36 Minimum size of building sewer shall be determined by using Table 4-3 Section 1105 UPC.

37 Water heater shall have a recovery efficiency of not less than 75% and a standby loss not to exceed 2.3 +67/rated volume as required by the State Energy Conservation Standards. Contractor shall submit Manufacturer's Compliance Certification w/equipment submittals.

38 Water heater alternates are acceptable w/ owner written approval, with Specifications to be submitted to Architect and approved by health department. Prior to installation.

39 All sinks to have hot (min. 120 F) & cold running wtr. under pressure dispensed from mixing faucets. Self closing valves to remain open for 10 seconds min.

40 All exposed plumbing and gas lines must be installed at least 6" off floor and 1" away from walls. An effort should be made to enclose all plumbing lines within walls. Where this is not possible, multiple runs or clusters of piping should be furred in, encased in an approved runaway or other approved, sealed enclosure.

41 Where pipe lines enter a wall, ceiling or floor, the opening around the line shall be tightly sealed.

42 Exposed pipe lines shall not be installed across any aisle traffic area or door opening.

43 Faucets shall have flow control devices to limit flow to a maximum of 2.5 G.P.M.

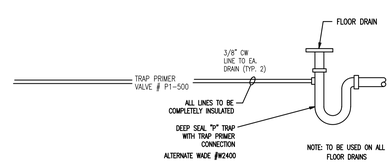

TRAP PRIMER DETAIL 07

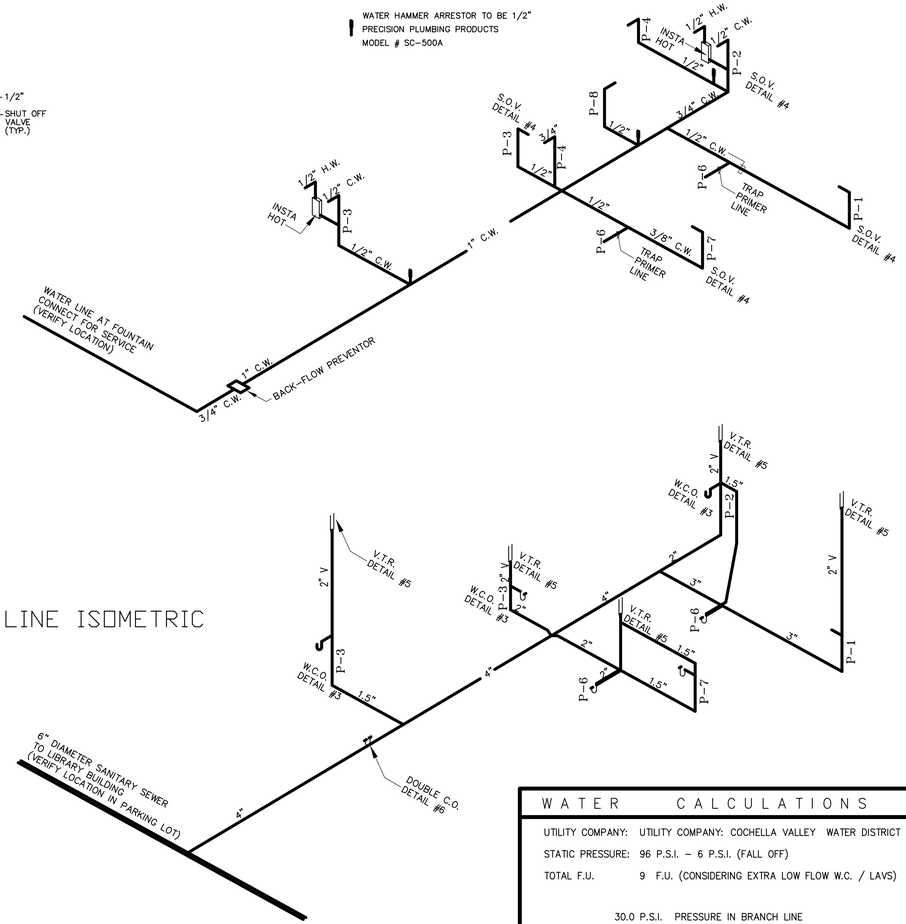

WATER LINE ISOMETRIC

DRAIN - WASTE - VENT ISOMETRIC

WATER CALCULATIONS

UTILITY COMPANY: UTILITY COMPANY: COCHELLA VALLEY WATER DISTRICT

STATIC PRESSURE: 96 P.S.I. – 6 P.S.I. (FALL OFF)

TOTAL F.U. 9 F.U. (CONSIDERING EXTRA LOW FLOW W.C. / LAVS)

30.0 P.S.I. PRESSURE IN BRANCH LINE

-8.00 PSI DROP THROUGH BACKFLOW PREVENTER
-5 P.S.I. FIXTURE LOSS
-3.0 P.S.I. DROP FOR ELEVATION (6 FT. X 0.43)

24.0 P.S.I. AVAILABLE

PIPE LENGTH (TAP TO LAST FIXTURE) = 160 FT

EQUIV. LENGTH OF FITTINGS = 12 FT

TOTAL DEVELOPED LENGTH = 172 FT

P.S.I. AVAILABLE 60.0 / TOTAL LENGTH 172 X 100 = 34.8 P.S.I. / 100 FT.

MAXIMUM ALLOWABLE LOSS PER 100 FEET OF PIPE = 35 P.S.I.

BRANCH PIPE SIZING CHART BASED ON 3.0 PSI DROP PER 100 FEET (PER ASPE DATA BOOK, TABLE 3-9)

PIPE SIZE	1/2"	3/4"	1"	1 1/4"	1 1/2"	2"	2 1/2"
FU (F.T.)	1	5	13	25	47	171	401
FU (F.V.)	–	–	–	–	10	74	265

PLAN CHECK NOTES

TOILETS TO BE ULTRA-LOW FLUSH (1.28 max G.P.M. MAX.)

URINALS TO BE ULTRA-LOW FLUSH (WATERLESS)

FAUCETS TO BE 2.2 G.P.M. MAX.

LAVATORY FAUCETS TO BE SELF CLOSING TYPE

PROVIDE VACUUM BREAKER AT HOSE BIBBS

CROSS CONNECTION PROTECTION TO BE PROVIDED AT ALL POTABLE WATER SUPPLIED EQUIPMENT OR APPLIANCE

Narkweather ARCHITECTS INC.
73 330 HWY 111, SUITE A / PALM DESERT, CA 92260-4016
PHONE: (760) 346-4090 / E-MAIL: info@narkweather.net

OWNERSHIP OF DOCUMENTS
DRAWINGS AND SPECIFICATIONS AS INSTRUMENTS OF SERVICE ARE AND SHALL REMAIN THE PROPERTY OF THE DESIGNER WHETHER THE PROJECT FOR WHICH THEY WERE PREPARED IS EXECUTED OR NOT. THEY ARE NOT TO BE USED ON OTHER PROJECTS OR EXTENSIONS TO THIS PROJECT EXCEPT BY AGREEMENT IN WRITING AND WITH APPROPRIATE COMPENSATION TO Narkweather Architects Inc.
COPYRIGHT 2016 Narkweather Architects

CITY OF RANCHO MIRAGE
OBSERVATORY
PROJECT DESCRIPTION Rancho Mirage Public Library
SITE ADDRESS 71-100 California 111, Rancho Mirage, CA 92270

SHEET CONTENT
PLUMBING PLAN

DRAWING SCALE: NOT TO SCALE

ISSUE DATE		
MONTH	DAY	YEAR
SEPT.	29	2016

1 REVISION DATE:
REVISION DATE:
REVISION DATE:
REVISION DATE:
REVISION DATE:

(FOR CHECK ENGINEER STAMP)
RECOMMENDED FOR APPROVAL BY: LELAND E. COLE R.C.E. 47159 EXP. 12/31/17 — DATE 9/27/16
APPROVED BY CITY OF RANCHO MIRAGE: WILLIAM A. EKPO, CITY ENGINEER R.C.E. 43715 Exp. 6/30/2017 — DATE

DRAWING NUMBER
P2
SHEET # 43 OF 56
PRIVATE REFERENCE #
CITY REFERENCE #

Bid Set - 10/07/2016

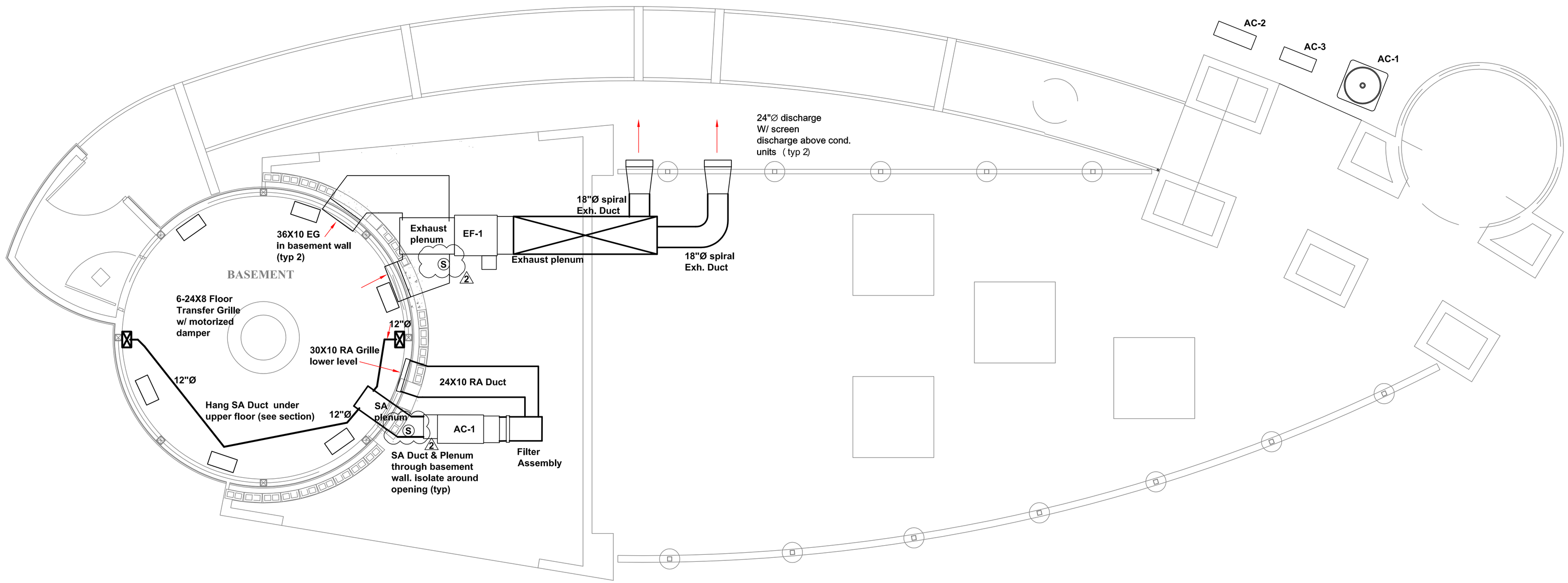

HVAC BASEMENT

Narkweather
ARCHITECTS INC.
73 330 HWY 111, SUITE A / PALM DESERT, CA 92260-4016
PHONE: (760) 346-4090 / E-MAIL: info@narkweather.net

OWNERSHIP OF DOCUMENTS
DRAWINGS AND SPECIFICATIONS AS INSTRUMENTS OF SERVICE ARE AND SHALL REMAIN THE PROPERTY OF THE DESIGNER WHETHER THE PROJECT FOR WHICH THEY WERE PREPARED IS EXECUTED OR NOT. THEY ARE NOT TO BE USED ON OTHER PROJECTS OR EXTENSIONS TO THIS PROJECT EXCEPT BY AGREEMENT IN WRITING AND WITH APPROPRIATE COMPENSATION TO Narkweather Architects Inc.
COPYRIGHT 2015 Narkweather Architects

CITY OF RANCHO MIRAGE

PROJECT DESCRIPTION: OBSERVATORY
Rancho Mirage Public Library

SITE ADDRESS: 71-100 California 111, Rancho Mirage, CA 92270

SHEET CONTENT

HVAC PLAN

DRAWING SCALE:
SCALE: 1/4" = 1'-0"

1	REVISION DATE:
2	REVISION DATE:
3	REVISION DATE:
4	REVISION DATE:
△	REVISION DATE:

(PLAN CHECK ENGINEER STAMP)

RECOMMENDED FOR APPROVAL BY:
LELAND E. COLE
R.C.E. 47159 EXP. 12/31/17
9/27/16
DATE

APPROVED BY CITY OF RANCHO MIRAGE:
WILLIAM A. ENOS, CITY ENGINEER
R.C.E. 43910, EXP. 6/30/2017
DATE

DRAWING NUMBER
M1.0

Scott
Design and Title 24, Inc.
77-085 MICHIGAN DRIVE
PALM DESERT, CA 92211
(760) 200-4780
www.scottdesignandtitle24.com

Bid Set - 10/07/2016

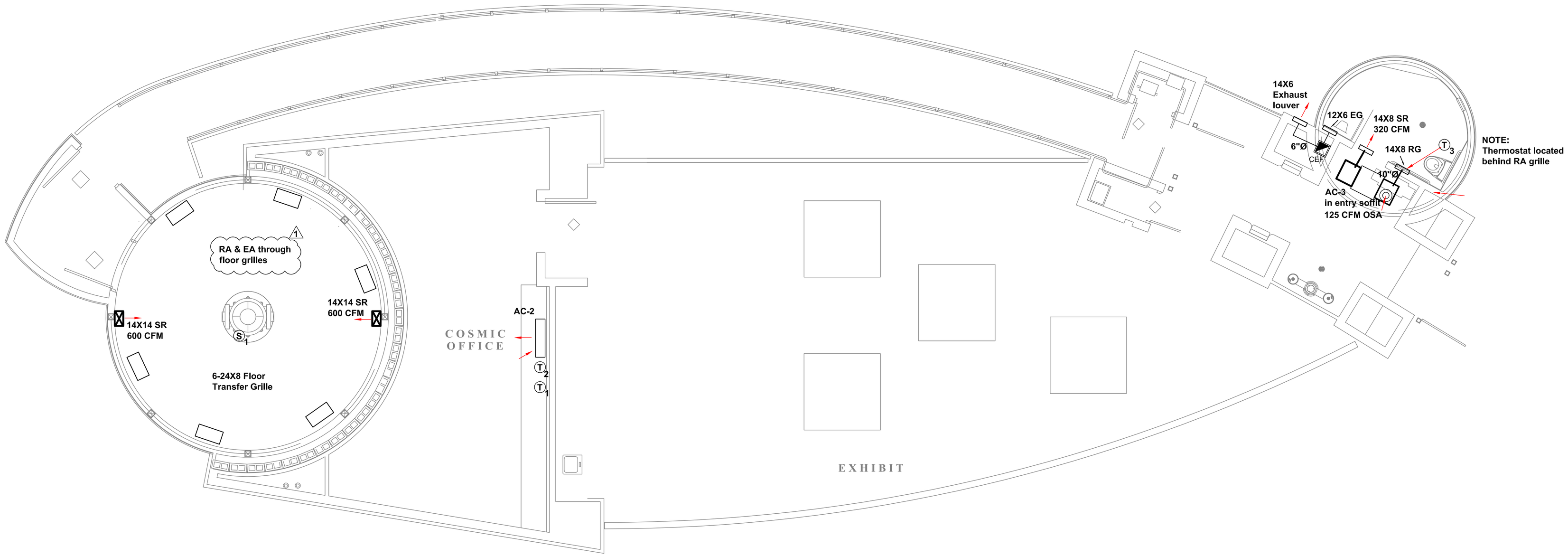

HVAC UPPER LEVEL

Narkweather
ARCHITECTS INC.
73 330 HWY 111, SUITE A / PALM DESERT, CA 92260-4016
PHONE: (760) 346-4090 / E-MAIL: info@narkweather.net

OWNERSHIP OF DOCUMENTS
DRAWINGS AND SPECIFICATIONS AS INSTRUMENTS OF SERVICE ARE AND SHALL REMAIN THE PROPERTY OF THE DESIGNER WHETHER THE PROJECT FOR WHICH THEY WERE PREPARED IS EXECUTED OR NOT. THEY ARE NOT TO BE USED ON OTHER PROJECTS OR EXTENSIONS TO THIS PROJECT EXCEPT BY AGREEMENT IN WRITING AND WITH APPROPRIATE COMPENSATION TO Narkweather Architects Inc.
COPYRIGHT 2015 Narkweather Architects

CITY OF RANCHO MIRAGE

PROJECT DESCRIPTION: OBSERVATORY
Rancho Mirage Public Library

SITE ADDRESS: 71-100 California 111, Rancho Mirage, CA 92270

SHEET CONTENT

HVAC PLAN

DRAWING SCALE:
SCALE: 1/4" = 1'-0"

1	REVISION DATE:
2	REVISION DATE:
3	REVISION DATE:
4	REVISION DATE:
	REVISION DATE:

(PLAN CHECK ENGINEER STAMP)
RECOMMENDED FOR APPROVAL BY:
LELAND E. COLE 9/27/16
DATE
R.C.E. 47159 EXP. 12/31/17
APPROVED BY CITY OF RANCHO MIRAGE:
WILLIAM A. ENOS, CITY ENGINEER
R.C.E. 43910, EXP. 6/30/2017
DATE

DRAWING NUMBER
M1.1

Scott
Design and Title 24, Inc.
77-085 MICHIGAN DRIVE
PALM DESERT, CA 92211
(760) 200-4780
www.scottdesignandtitle24.com

Bid Set - 10/07/2016

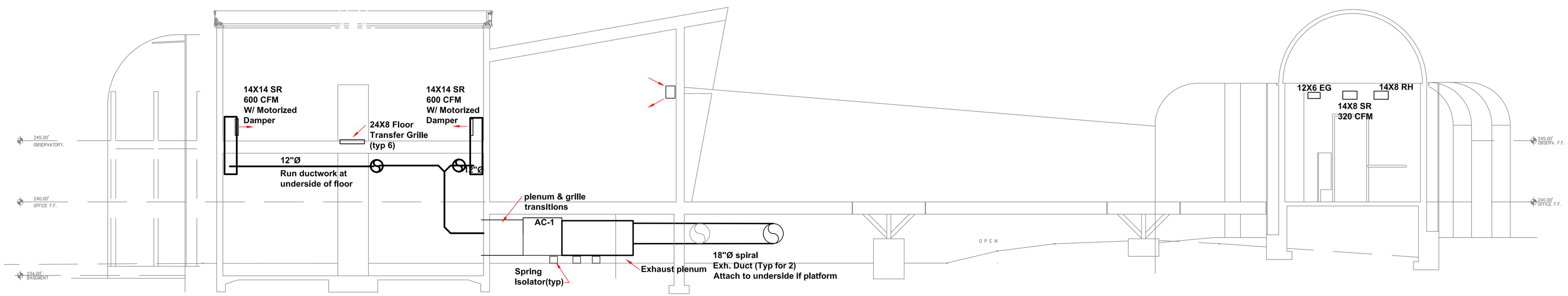

HVAC SECTION

Narkweather
ARCHITECTS INC.
73 330 HWY 111, SUITE A / PALM DESERT, CA 92260-4016
PHONE: (760) 346-4090 / E-MAIL: info@narkweather.net

OWNERSHIP OF DOCUMENTS
DRAWINGS AND SPECIFICATIONS AS INSTRUMENTS OF SERVICE ARE AND SHALL REMAIN THE PROPERTY OF THE DESIGNER WHETHER THE PROJECT FOR WHICH THEY WERE PREPARED IS EXECUTED OR NOT. THEY ARE NOT TO BE USED ON OTHER PROJECTS OR EXTENSIONS TO THIS PROJECT EXCEPT BY AGREEMENT IN WRITING AND WITH APPROPRIATE COMPENSATION TO Narkweather Architects Inc.
COPYRIGHT 2015 Narkweather Architects

CITY OF RANCHO MIRAGE

PROJECT DESCRIPTION: OBSERVATORY
Rancho Mirage Public Library
SITE ADDRESS: 71-100 California 111, Rancho Mirage, CA 92270

SHEET CONTENT

HVAC SECTION PLAN

DRAWING SCALE:
SCALE: 1/4" = 1'-0"

1	REVISION DATE:
2	REVISION DATE:
3	REVISION DATE:
4	REVISION DATE:
	REVISION DATE:

(PLAN CHECK ENGINEER STAMP)

RECOMMENDED FOR APPROVAL BY:
LELAND E. COLE 9/27/16
R.C.E. 47159 EXP. 12/31/17 DATE
APPROVED BY CITY OF RANCHO MIRAGE:
WILLIAM A. ENOS, CITY ENGINEER DATE
R.C.E. 43910, Exp. 6/30/2017

DRAWING NUMBER
M2.0

Scott
Design and Title 24, Inc.
77-085 MICHIGAN DRIVE
PALM DESERT, CA 92211
(760) 200-4780
www.scottdesignandtitle24.com

Bid Set - 10/07/2016

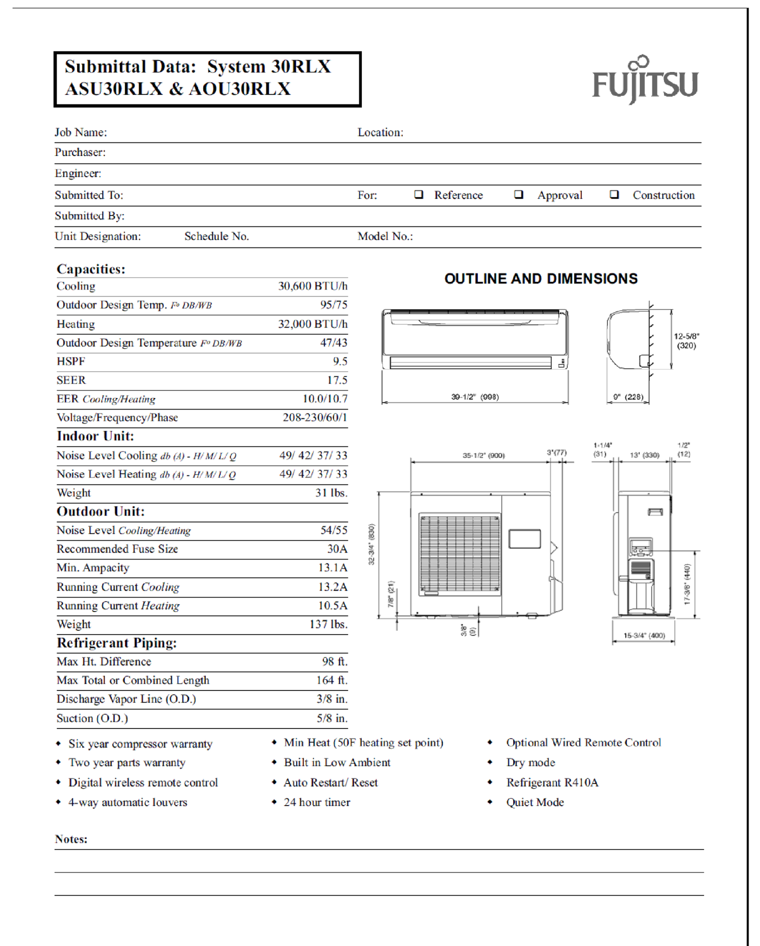

AC-2

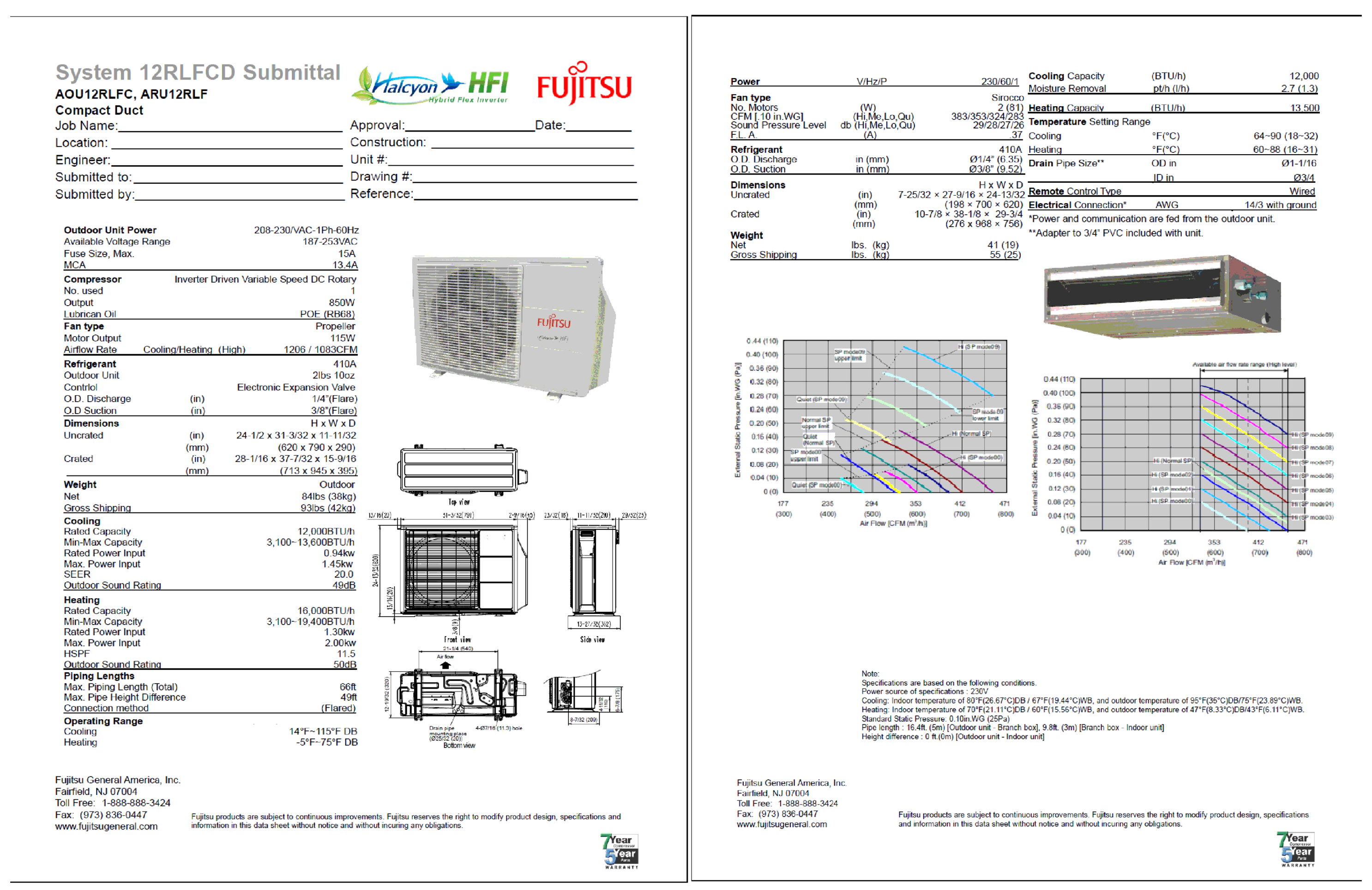

AC-3

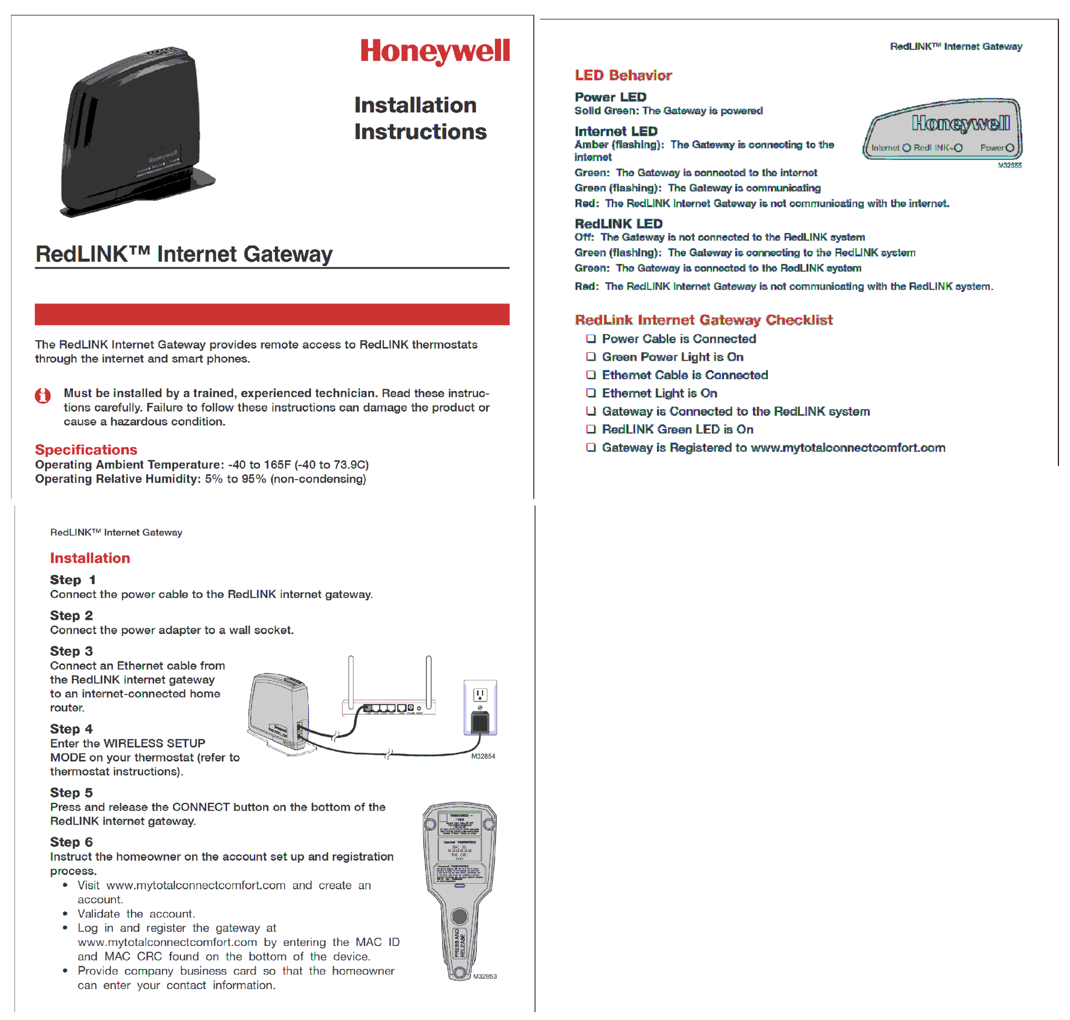

AIR CONDITIONING
INTERNET CONTROLS

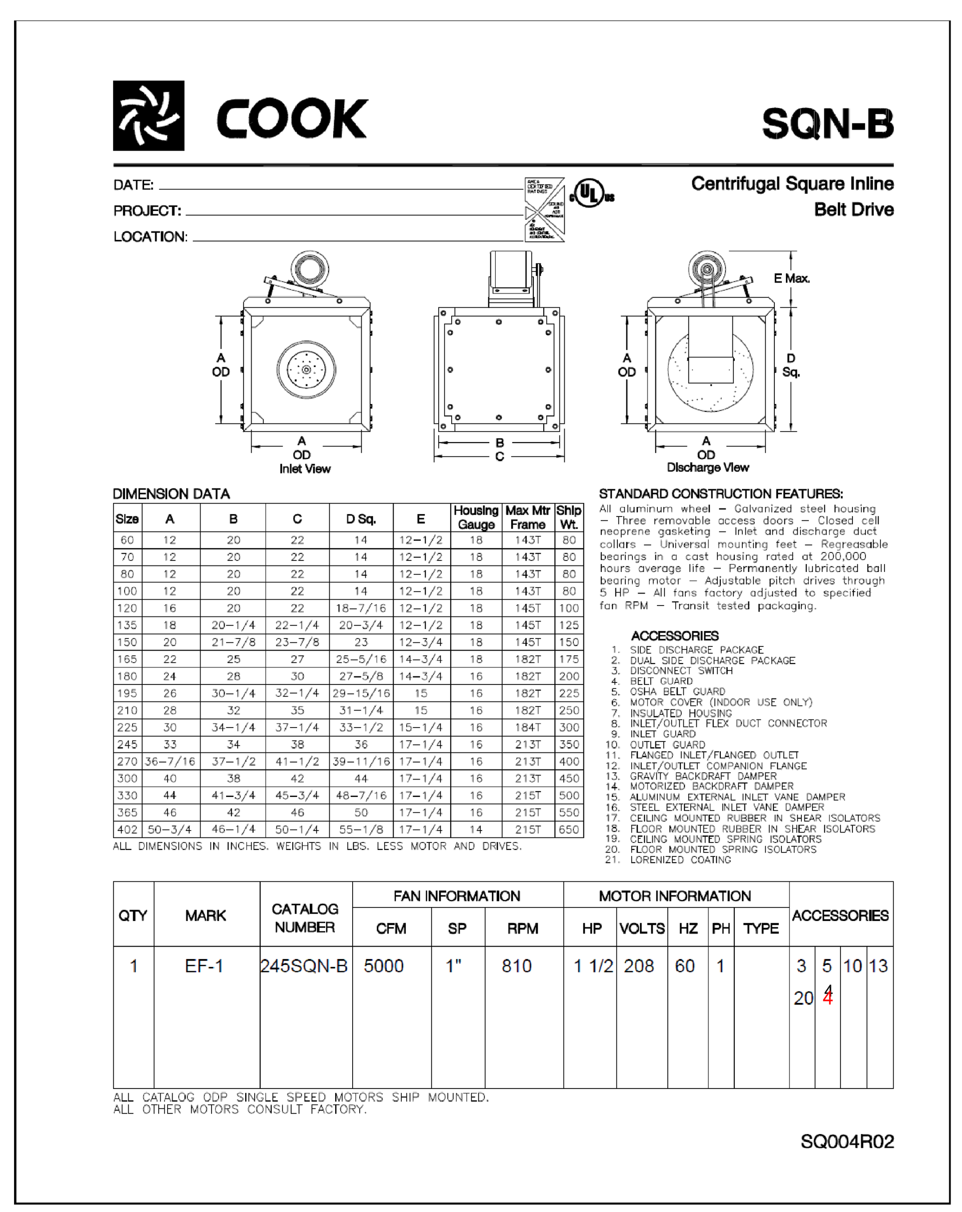

QTY	MARK	CATALOG NUMBER	CFM	SP	RPM	HP	VOLTS	HZ	PH	TYPE	ACCESSORIES
1	EF-1	245SQN-B	5000	1"	810	1 1/2	208	60	1		3 5 10 13 20 4

ALL CATALOG ODP SINGLE SPEED MOTORS SHIP MOUNTED.
ALL OTHER MOTORS CONSULT FACTORY.

EF-1

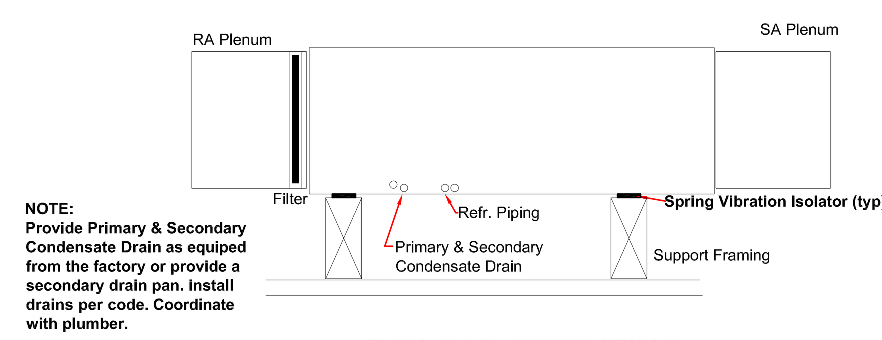

NOTE:
Provide Primary & Secondary Condensate Drain as equiped from the factory or provide a secondary drain pan. Install drains per code. Coordinate with plumber.

FAN COIL MOUNTING NTS

A/C UNIT CLEARANCE
Allow 30" clearance to service side of unit, 48"above unit, 6" on one side and 24" on the remaining sides. Allow 24" between units or to meet code (which ever is more)

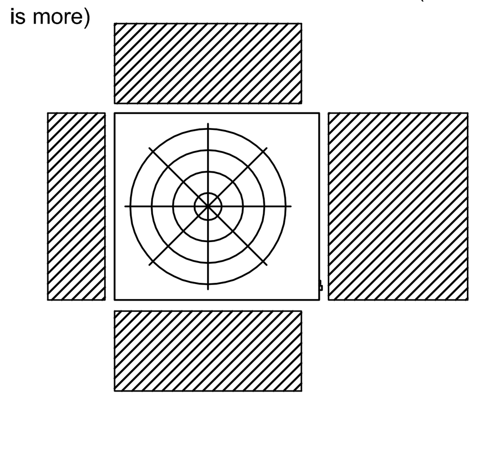

CONDENSER CLEARANCE NOTES NTS

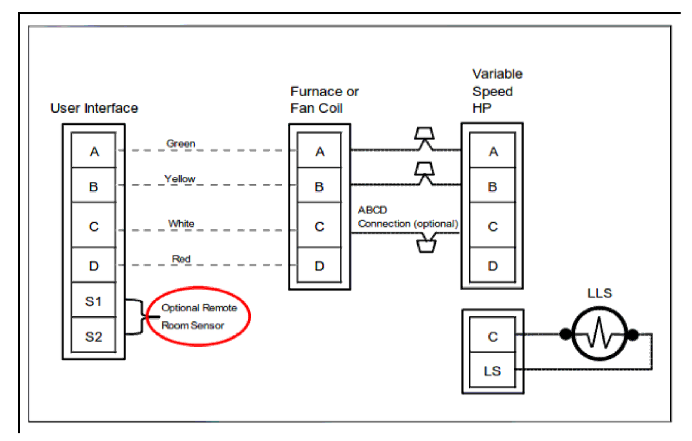

THERMOSTAT WIRING for AC-1 NTS

PROVIDE THERMOSTATS WITH REMOTE CONTROL CAPABILITIES

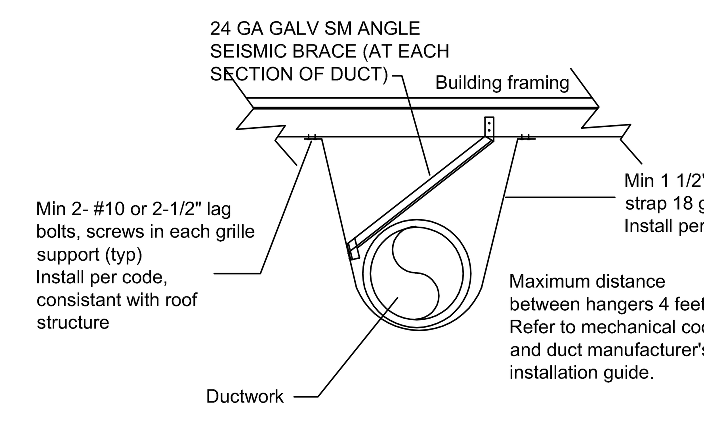

DUCTWORK HANGING NTS

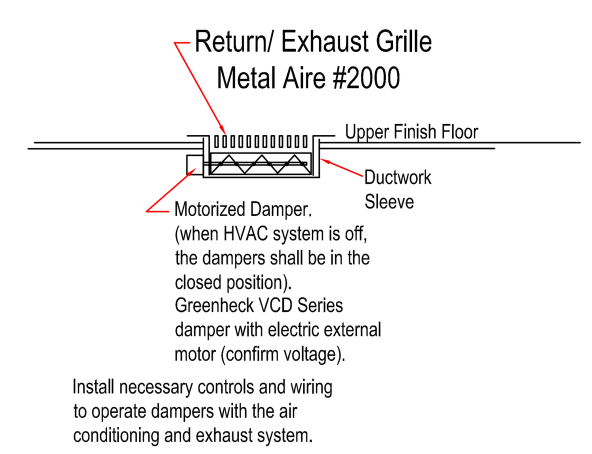

MOTORIZED DAMPERS

INSTALL AT ALL SUPPLY/ RETURN/EXHAUST GRILLE LOCATIONS IN THE OBSERVATORY

Operating Sequence:
The indoor temperature of the dome shall maintain temperature of the thermostat setting. Approximately 2-3 hours (confirm) prior to instrument operation, the temperature setting shall be the outside temperature at time of dome opening.
The exhaust system shall be activated prior to instrument operating to assure equal temperature of the instrument, indoor air and outdoor air. When the exhaust fan is turned off, the dampers will go to the closed position.
The HVAC systems in the office and the restrooms shall operate to maintain the thermostat setting.
All systems shall be set up to operate from a remote computer.

HVAC SYMBOLS
- CONDENSING UNIT CONFIRM LOCATION
- AIR HANDLER
- CEF CEILING EXHAUST GRILL CONFIRM LOCATION
- CD CEILING SUPPLY AIR DIFFUSER
- SLOT SUPPLY & RETURN AIR OPENINGS SR & RG
- SUPPLY DUCTWORK
- RETURN DUCTWORK
- T PROGRAMMABLE THERMOSTAT
- S DUCT SMOKE DETECTOR

PANASONIC	CEF
MDL. #	FV11VQ5
CFM	91 CFM @ 1/4" SP
WATTS / VOLTS	31W 120v-1PH
SONES	.8
LBS.	30

CARRIER EQUIPMENT	3 TON AC 1
AIR HANDLER	FE4ANB005
BTUH OUT (heat)	33000
A.H. WEIGHT	174
HSPF / COP	13.0
HP @ 208/230V- 1PH	.5 HP VS
SOUND DATA	75dBA
C.F.M.	1200
BTUH OUT (cool)	35000
CONDENCING	25VNA036A
MCA @ 208/230V- 1PH	23.5
FLA @ 208/230V- 1PH	19.4
SEER	20.5
EER	14.5
LBS.	269
REFRIGERANT	PURON R-410A
THERMOSTAT	STSTXCCITNO1
REMOTE SENSOR	STSTXCCRRSO1

PROVIDE LOW AMBIENT CONTROLS FOR UNIT TO OPERATE TO 0°.
UNIT OPERATES TO PROVIDE INDOOR TEMPERATURE AND OUTDOOR TEMPERATURE CLOSE TO THE SAME WHEN DOME OPENS.

HVAC NOTES:

- Verify all dimmensions at job site prior to fabrication and installation of material.
- Establish with Architect's approval final location of all equipment, ductwork, etc. Units shall be installed in equipment area as indicated on the plans. Coordinate with general contractor.
- Equipment shall be installed per code requirements and per manufacturer's recommendations.
- Duct sizes are net inside dimensions. Increase duct size where internal duct insulation is required.
- All work shall conform to the state and local code requirements.
- Verify at the job site the exact location of the structural members such as beams, columns, etc., prior to location equipment, ductwork and grilles. Coordinate with related contractors prior to installation.
- Clearance around HVAC equipment shall comply with code requirements and manufacture's recommendation.
- The drawings are diagrammatic and do not release the contractor from the responsibility of installing the HVAC systems per code requirements, free from defects and in excellent working condition. Installation shall be done by skilled workman, trained for the work performed.
- Air handlers mounted in the attic shall be provided with:
  -An access opening large enough to remove the largest piece of attic equipment, but not less than 30" x 20".
  -An unobstructed passageway that is large enough to remove the largest piece of equipment, but not less than 30" x 30" and not more than 2' away from the access opening. And if less than 6" high, is no more the 20' in length when measuring along the center line of the passageway from the access to the equipment.
  -Solid flooring from the access to the furnace for service.
  -Permanent lighting and electrical outlet at or near the furnace in the attic per electrical code with the switch accessible at the ceiling opening.
- All thermostats shall be electronic programmable type 7 day. Install low voltage wiring as required. Locate in area for proper temperature sensing.
- Furnish & install refrigerant piping per code requirements and manufacturers recommendations. Protect the piping from any damage.
- The HVAC contractor shall provide refrigerant piping and low voltage wiring as required for each remote system. Pipe sizing and install shall be per manufacturer's recommendations.
- Seal all ductwork as required to comply with Title 24 requirements. The ductwork shall be installed per manufacturer's recommendations.
- Flex ductwork and fasteners shall be U.L. 181 approved and be installed without shape bends or crimps to meet code requirements. 'R' value is indicated by the Title 24 Energy Calculations. Use minimum 2" wide hanger material. (602.3)
- Underground ductwork shall be 'Spunstrand' or equal fiberglass. Installation will be per manufacturer's recommendations. All plenums, fittings and sound traps will be sealed water tight and covered with minimum of 3" of concrete. Duct liner is required for all underground ductwork. Johns-Manville 'Circline' (or equal) will be installed as per manufacturer's recommendations.
- Underground ductwork outside footings of residence shall be covered with a minimum of 3" concrete.
- Coordinate underground installation with related trades. Check footings, pads and plumbing prior to installation.
- Only approved material meeting the requirements of U.L. 181 shall be installed within ducts or plenums.
- Duct liner shall be fastened with both approved adhesive and mechanical fasteners, exposed edges shall be treated as not to cause deterioration of the liner. (605.0)
- External duct insulation shall be labeled with manufacturer's name, the 'R' value, the flame spread index and the smoke development index. (604.4)
- Metal fittings plenums and boxes shall be sealed and insulated properly.
- Ductwork shall be constructed in accordance with the chapter 6 of the CMC or applicable SMACNA standards.
- Duct joints shall be sealed with material to meet Title 24 requirements and current building codes.
- Ductwork installation shall be done in as to not obstruct access to HVAC equipment for service and maintenance.
- Registers and grills shall be Metal-Aire series 2000 (or equal). Supplies shall have OBD.
- The HVAC contractor shall provide refrigerant piping and low voltage wiring as required for each remote system. Pipe sizing and install shal be per manufacturer's recommendations.
- All mechanical equipment shall operate free of any objectionable noise or vibration.
- Upon completion of the project, the mechanical contractor shall balance the air flow at each register and grille, test operation of the equipment and install new filters.
- Install condensate drains. The primary shall be piped to the planter area or dry well, the secondary piped above a window or somewhere visible, to indicate secondary pan overflow.
- Coordinate location of the condensate drain with plumbing contractor. Pipe primary condensate to an approved receptacle. (309.3 & 1105.10)
- The equipment installed outside the building shall be listed for outdoor installations or be in an approved weatherproof enclosure per CMC.
- Coordinate high voltage wiring with the electrical contractor. The electrical contractor shall provide line voltage wiring, high and low voltage conduit, disconnect switches, fuses, etc. for HVAC equipment.
- The general contractor shall provide framing required for the installation of the HVAC system. It is the responsibility of the mechanical contractor to lay out the openings, platforms, curbs, etc. for the framer.
- Equipment designd fixed in position shall be securely fastened in place. (303.4)
- Disconnect switches shall be provided for all HVAC units (CMC 308). Show required working clearance to disconnect per (CEC 110-26a) (see electrical drawings).
- All HVAC equipment shall be approved prior to installation by nationally recognized standards and evidenced by the listing and labeling of an approved agency (CMC 302.1).
- Provide service receptacle within 25' of mechanical as required by code. (see electrical drawings)
- Fixed appliances shall be securely fastened down.
- When more then one HVAC unit is installed in a building, each unit shall be permanently labeled to indicate the area or space served by each unit (CMC 304.5)
- Duct smoke detectors are required for air moving systems in excess of 2000 cfm and be mounted in the supply plenum as required by the code. An air moving system is a system designed to provide heating, cooling or ventilation in which one or more air handling units are used to supply air to a common space or to draw air from a common plenum or space.
- Balance the HVAC systems to the air quantities as indicated on the plans and per owner's satisfaction.
- Perform HERS testing as required by the Title 24 energy calculations to confirm low duct leakage, proper refrigerant charge,TXV and to confirm that high EER unit has been installed plus any other HERS test required.
- Not more than one appliance shall be connected to a single vent unless calculations showing conformance to CMC Chapter 8 are first submitted to and approved by the Building Safety Department
- Mechanical equipment supported directly by the ground shall be isolated from the ground by a level concrete slab extending not less than 3 inches above the adjoining ground level (CMC 1106.2)
- Ducts used for kitchen range ventilation shall be metal and have a smooth interior.
- Dryer exhaust ducts, not less than 4"Ø, shall have a smooth interior surface, and shall terminate outside the building (CMC 504.1, 504.3.2, 504.3.2.1). Dryer ducts shall not exceed a total of combined horizontal and veritical length of 14', including two 90 degree elbows. Two feet shall be deducted for each 90 degree elbow in excess of two (CMC 105.1). Provide a detail demonstrating compliance, otherwise, provide a design by a licenced engineer for consideration as an alternate method installation (CMC 105.1).
- Provide adequate high and low combustion air louvers for FAU,s (as required). Provide combustion air for water heater and fireplaces to the outside per manufacturer's recommendations and per code requirements.
- Exhaust fans shall be provided for all bathrooms, kitchen and utility rooms. The fans for the bathrooms and utility room shall be a minimum of 50 CFM @ .25" SP. the fan for the kitchen shall be a minimum of 100 CFM @ .25" SP. The maximum sone value will not be greater than 1.0. Vent all fans through roof to weatherproof jack, per code.
- A ventilation fan shall be furnished per Title 24 energy code to run continuous. The capacity of the fan shall be calculated per Title 24. A sign should state that the fan should run continuously for proper residence ventilation.
- All ducts penetrating the wall or ceiling separating the dwelling unit from the garage shall be minimum 26 gauge sheet metal.
- Not more than one appliance shall be connected to a single vent unless calculations showing conformance to CMC Chapter 8 are first submitted to and approved by the Building and Safety Department.
- Mechanical equipment supported directly by the ground shall be isolated from the ground by a level concrete slab extending not less than 3 inches above the adjoining ground level (CMC 1106.2).
- Combustion air intake grilles shall have a corrosion resistant screen not smaller than 1/4" mesh (CMC 701.9(B)).
- Provide minimum 30" clearance above the range or cooktop to unprotected combustible material, or 24" clearance to metal ventilating hood (CMC 916.0(B), 916.2(B)).
- Provide refrigerant service ports with required locking type, tamper proof refrigerant caps (CMC 1106.3.1)
- At the time of rough installation or during storage on the construction site and until the final startup of the heating and air conditioning equipment, all duct and other related air distribution component openings shall be covered with tape, plastic, sheetmetal or other material acceptable to the enforcement agency to reduce the amount of dust or debris which may collect in the system (CALGreen #4.504.1)
- Mechanical exhaust fans which exhaust directly from bathrooms shall be ENERGY STAR, ducted to terminate outside the building and unless functing as a component of a whole house ventilation system be controlled be a readily accessible humidistat. Humidistat shall be a Honeywell #H46D1214

Scott Design and Title 24, Inc.
77-085 MICHIGAN DRIVE
PALM DESERT, CA 92211
(760) 200-4780
www.scottdesignandtitle24.com

Narkweather ARCHITECTS INC.
73 330 HWY 111, SUITE A / PALM DESERT, CA 92260-4016
PHONE: (760) 346-4090 / E-MAIL: info@narkweather.net

OWNERSHIP OF DOCUMENTS DRAWINGS AND SPECIFICATIONS AS INSTRUMENTS OF SERVICE ARE AND SHALL REMAIN THE PROPERTY OF THE DESIGNER WHETHER THE PROJECT FOR WHICH THEY WERE PREPARED IS EXECUTED OR NOT. THEY ARE NOT TO BE USED ON OTHER PROJECTS OR EXTENSIONS TO THIS PROJECT EXCEPT BY AGREEMENT IN WRITING AND WITH APPROPRIATE COMPENSATION TO Narkweather Architects Inc.
COPYRIGHT 2015 Narkweather Architects

CITY OF RANCHO MIRAGE
PROJECT DESCRIPTION: OBSERVATORY — Rancho Mirage Public Library
SITE ADDRESS: 71-100 California 111, Rancho Mirage, CA 92270

SHEET CONTENT: HVAC NOTES PLAN

DRAWING SCALE: SCALE: AS NOTED

REVISION	DATE
1	
2	
3	
4	

(PLAN CHECK ENGINEER STAMP)
RECOMMENDED FOR APPROVAL BY:
LELAND E. COLE — 9/27/16 DATE
R.C.E. 47159 EXP. 12/31/17
APPROVED BY CITY OF RANCHO MIRAGE:
WILLIAM A. ENOS, CITY ENGINEER — DATE
R.C.E. 43910, EXP. 6/30/2017

DRAWING NUMBER
M3.0

Bid Set - 10/07/2016

Project Name:	Observatory	NRCC-PRF-01-E	Page 1 of 16
Project Address:	Highway 111 Rancho Mirage 92270	Calculation Date/Time:	15:44, Sun, Oct 25, 2015
Compliance Scope:	NewEnvelopeAndMechanical	Input File Name:	Observatory-RM-Martin-15.xml

A. PROJECT GENERAL INFORMATION

1.	Project Location (city)	Rancho Mirage	7.	# of dwelling units	0
2.	CA Zip Code	92270	8.	Standards Version	Compliance2015
3.	Climate Zone	15	9.	Compliance Software (version)	EnergyPro 6.7
4.	Total Conditioned Floor Area	1,150 ft²	10.	Building Orientation (deg)	(W) 270 deg
5.	Total Unconditioned Floor Area	0 ft²	11.	Permitted Scope of Work	NewEnvelopeAndMechanical
6.	# of Stories (Habitable Above Grade)	1	12	Building Type(s)	Nonresidential

B. COMPLIANCE RESULTS FOR PERFORMANCE COMPONENTS § 140.1

BUILDING COMPLIES

1. Energy Component	2. Standard Design (TDV)	3. Proposed Design (TDV)	4. Compliance Margin (TDV)	5. Percent Better than Standard
Space Heating	5.6	16.0	-10.4	-185.7%
Space Cooling	222.6	247.0	-24.4	-11.0%
Indoor Fans	149.9	78.9	71.0	47.4%
Heat Rejection	--	--	--	--
Pumps & Misc.	--	--	--	--
Domestic Hot Water	17.2	12.3	4.9	28.5%
Indoor Lighting	42.0	42.0	--	0.0%
COMPLIANCE TOTAL	**437.3**	**396.2**	**41.1**	**9.4%**
Receptacle	103.1	103.1		0.0%
Process	--	--		--
Process Ltg	--	--		--
TOTAL	**540.4**	**499.3**		**7.6%**

Project Name:	Observatory	NRCC-PRF-01-E	Page 2 of 16
Project Address:	Highway 111 Rancho Mirage 92270	Calculation Date/Time:	15:44, Sun, Oct 25, 2015
Compliance Scope:	NewEnvelopeAndMechanical	Input File Name:	Observatory-RM-Martin-15.xml

C. PRIORITY PLAN CHECK/ INSPECTION ITEMS (in order of highest to lowest TDV energy savings)

1st	Indoor Fans: Check envelope and mechanical
2nd	Domestic Hot Water: Check mechanical
3rd	Heat Rejection: Check envelope and mechanical
4th	Pumps & Misc.: Check mechanical
5th	Indoor Lighting: Check lighting
6th	Space Heating: Check envelope and mechanical
7th	Space Cooling: Check envelope and mechanical

Compliance Margin By Energy Component (from Table B column 4)

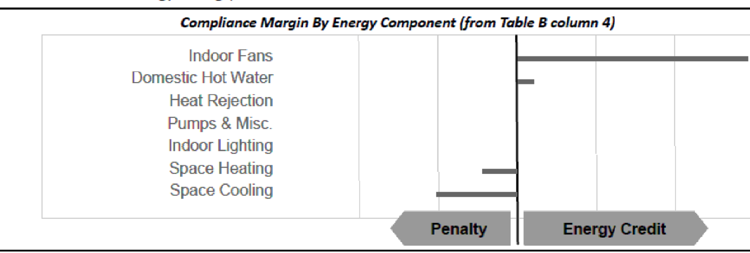

D. EXCEPTIONAL CONDITIONS

The project shows partial compliance, either envelope only or mechanical only, excluding lighting systems. The building must show partial compliance including lighting or full new building compliance or show prescriptive lighting compliance before operation

E. HERS VERIFICATION

This Section Does Not Apply

F. ADDITIONAL REMARKS

None Provided

Project Name:	Observatory	NRCC-PRF-01-E	Page 3 of 16
Project Address:	Highway 111 Rancho Mirage 92270	Calculation Date/Time:	15:44, Sun, Oct 25, 2015
Compliance Scope:	NewEnvelopeAndMechanical	Input File Name:	Observatory-RM-Martin-15.xml

G. COMPLIANCE PATH & CERTIFICATE OF COMPLIANCE SUMMARY

Identify which building components use the performance or prescriptive path for compliance. "NA" = not in project

For components that utilize the performance path, indicate the sheet number that includes mandatory notes on plans.

Building Component	Compliance Path	Compliance Forms *(required for submittal)*	Location of Mandatory Notes on Plans
Envelope	☒ Performance	NRCC-PRF-ENV-DETAILS (section of the NRCC-PRF-01-E)	
	☐ Prescriptive	NRCC-ENV-01 / 02 / 03 / 04 / 05 / 06-E	
	☐ NA		
Mechanical	☒ Performance	NRCC-PRF-MCH-DETAILS (section of the NRCC-PRF-01-E)	
	☐ Prescriptive	NRCC-MCH-01 / 02 / 03 / 04 / 05 / 06 / 07-E	
	☐ NA		
Domestic Hot Water	☒ Performance	NRCC-PRF-PLB-DETAILS (section of the NRCC-PRF-01-E)	
	☐ Prescriptive	NRCC-PLB-01-E	
	☐ NA		
Lighting (Indoor Conditioned)	☐ Performance	NRCC-PRF-LTI-DETAILS (section of the NRCC-PRF-01-E)	
	☐ Prescriptive	NRCC-LTI-01 / 02 / 03 / 04 / 05-E	
	☒ NA		
Covered Process: Commercial Kitchens	☐ Performace	S2 (section of the NRCC-PRF-01-E)	
	☐ Prescriptive	NRCC-PRC-01/ 03-E	
	☒ NA		
Covered Process: Computer Rooms	☐ Performance	S3 (section of the NRCC-PRF-01-E)	
	☐ Prescriptive	NRCC-PRC-01/ 04-E	
	☒ NA		
Covered Process: Laboratory Exhaust	☐ Performace	S4 (section of the NRCC-PRF-01-E)	
	☐ Prescriptive	NRCC-PRC-01/ 09-E	
	☒ NA		

Project Name:	Observatory	NRCC-PRF-01-E	Page 4 of 16
Project Address:	Highway 111 Rancho Mirage 92270	Calculation Date/Time:	15:44, Sun, Oct 25, 2015
Compliance Scope:	NewEnvelopeAndMechanical	Input File Name:	Observatory-RM-Martin-15.xml

G. COMPLIANCE PATH & CERTIFICATE OF COMPLIANCE SUMMARY

The following building components are only eligible for prescriptive compliance. Indicate which are relevant to the project. / *The following building components may have mandatory requirements per Part 6. Indicate which are relevant to the project.*

Yes	NA	Prescriptive Requirement	Compliance Forms	Yes	NA	Mandatory Requirement	Compliance Forms
☐	☒	Lighting (Indoor Unconditioned) §140.6	NRCC-LTI-01 / 02 / 03 / 04 / 05-E	☐ ☐	☒ ☒	Commissioning: §120.8 Simple Systems Complex Systems	NRCC-CXR-01 / 02 / 03 / 05-E NRCC-CXR-01 / 02 / 04 / 05-E
☐	☒	Lighting (Outdoor) §140.7	NRCC-LTO-01 / 02 / 03-E	☐	☒	Electrical: §130.5	NRCC-ELC-01-E
☐	☒	Lighting (Sign) §140.8	NRCC-LTS-01-E	☐	☒	Solar Ready: §110.10	NRCC-SRA-01 / 02-E
☐	☒	Solar Thermal Water Heating: §140.5	NRCC-STH-01-E	☐ ☐ ☐ ☐ ☐	☒ ☒ ☒ ☒ ☒	Covered Process: §120.6 Parking Garage Commercial Refrigeration Warehouse Refrigeration Compressed Air Process Boilers	NRCC-PRC-01-E NRCC-PRC-02-E NRCC-PRC-05-E NRCC-PRC-06/07/08-E NRCC-PRC-10-E NRCC-PRC-11-E

Project Name:	Observatory	NRCC-PRF-01-E	Page 5 of 16
Project Address:	Highway 111 Rancho Mirage 92270	Calculation Date/Time:	15:44, Sun, Oct 25, 2015
Compliance Scope:	NewEnvelopeAndMechanical	Input File Name:	Observatory-RM-Martin-15.xml

H. CERTIFICATE OF INSTALLATION, CERTIFICATE OF ACCEPTANCE & CERTIFICATE OF VERIFICATION SUMMARY (NRCI/NRCA/NRCV) –
Documentation Author to indicate which Certificates must be submitted for the features to be recognized for compliance
(Retain copies and verify forms are completed and signed to post in field for Field Inspector to verify).
See Tables G. and H. in MCH and LTI Details Sections for Acceptance Tests and forms by equipment.

Building Component	Compliance Forms *(required for submittal)*	Confirmed Pass	Confirmed Fail
Envelope	☒ NRCI-ENV-01-E - For all buildings	☐	☐
	☐ NRCA-ENV-02-F- NFRC label verification for fenestration	☐	☐
Mechanical	☒ NRCI-MCH-01-E - For all buildings with Mechanical Systems	☐	☐
	☒ NRCA-MCH-02-A- Outdoor Air	☐	☐
	☒ NRCA-MCH-03-A – Constant Volume Single Zone HVAC	☐	☐
	☐ NRCA-MCH-04-H- Air Distribution Duct Leakage	☐	☐
	☐ NRCA-MCH-05-A- Air Economizer Controls	☐	☐
	☐ NRCA-MCH-06-A- Demand Control Ventilation	☐	☐
	☒ NRCA-MCH-07-A – Supply Fan Variable Flow Controls	☐	☐
	☐ NRCA-MCH-08-A- Valve Leakage Test	☐	☐
	☐ NRCA-MCH-09-A – Supply Water Temp Reset Controls	☐	☐
	☐ NRCA-MCH-10-A- Hydronic System Variable Flow Controls	☐	☐
	☐ NRCA-MCH-11-A – Auto Demand Shed Controls	☐	☐
	☐ NRCA-MCH-12-A- Packaged Direct Expansion Units	☐	☐
	☐ NRCA-MCH-13-A- Air Handling Units and Zone Terminal Units	☐	☐
	☐ NRCA-MCH-14-A- Distributed Energy Storage	☐	☐
	☐ NRCA-MCH-15-A – Thermal Energy Storage	☐	☐
	☐ NRCA-MCH-16-A- Supply Air Temp Reset Controls	☐	☐
	☐ NRCA-MCH-17-A – Condensate Water Temp Reset Controls	☐	☐
	☐ NRCA-MCH-18-A- Energy Management Controls Systems	☐	☐
	☐ NRCV-MCH-04-H- Duct Leakage Test	☐	☐

Project Name:	Observatory	NRCC-PRF-01-E	Page 6 of 16
Project Address:	Highway 111 Rancho Mirage 92270	Calculation Date/Time:	15:44, Sun, Oct 25, 2015
Compliance Scope:	NewEnvelopeAndMechanical	Input File Name:	Observatory-RM-Martin-15.xml

H. CERTIFICATE OF INSTALLATION, CERTIFICATE OF ACCEPTANCE & CERTIFICATE OF VERIFICATION SUMMARY (NRCI/NRCA/NRCV) –
Documentation Author to indicate which Certificates must be submitted for the features to be recognized for compliance
(Retain copies and verify forms are completed and signed to post in field for Field Inspector to verify).
See Tables G. and H. in MCH and LTI Details Sections for Acceptance Tests and forms by equipment.

Building Component	Compliance Forms *(required for submittal)*	Confirmed Pass	Confirmed Fail
Plumbing	☒ NRCI-PLB-01-E - For all buildings with Plumbing Systems	☐	☐
	☐ NRCI-PLB-02-E - required on central systems in high-rise residential, hotel/motel application.	☐	☐
	☐ NRCI-PLB-03-E - Single dwelling unit systems in high-rise residential, hotel/motel application.	☐	☐
	☐ NRCI-PLB-21-E - HERS verified central systems in high-rise residential, hotel/motel application.	☐	☐
	☐ NRCI-PLB-22-E - HERS verified single dwelling unit systems in high-rise residential, hotel/motel application.	☐	☐
	☐ NRCV-PLB-21-H- HERS verified central systems in high-rise residential, hotel/motel application.	☐	☐
	☐ NRCV-PLB-22-H - HERS verified single dwelling unit systems in high-rise residential, hotel/motel application.	☐	☐
	☐ NRCI-STH-01-E - Any solar water heating	☐	☐
Indoor Lighting	☐ NRCI-LTI-01-E - For all buildings	☐	☐
	☐ NRCI-LTI-02-E - Lighting control system, or for an Energy Management Control System (EMCS)	☐	☐
	☐ NRCI-LTI-03-E - Line-voltage track lighting integral current limiter, or for a supplementary overcurrent protection panel used to energize only line-voltage track lighting	☐	☐
	☐ NRCI-LTI-04-E - Two interlocked systems serving an auditorium, a convention center, a conference room, or a theater	☐	☐
	☐ NRCI-LTI-05-E - Lighting Control Credit Power Adjustment Factor (PAF)	☐	☐
	☐ NRCI-LTI-06-E - Additional wattage installed in a video conferencing studio	☐	☐
	☐ NRCA-LTI-02-A - Occupancy sensors and automatic time switch controls.	☐	☐
	☐ NRCA-LTI-03-A - Automatic daylighting controls	☐	☐
	☐ NRCA-LTI-04-A - Demand responsive lighting controls	☐	☐
Outdoor Lighting	☐ NRCI-LTO-01-E – Outdoor Lighting	☐	☐
	☐ NRCI-LTO-02-E- EMCS Lighting Control System	☐	☐
	☐ NRCA-LTO-02-A - Outdoor Lighting Control	☐	☐
Sign Lighting	☐ NRCI-LTS-01-E – Sign Lighting	☐	☐
Electrical	☐ NRCI-ELC-01-E - Electrical Power Distribution	☐	☐
Photovoltaic	☐ NRCI-SPV-01-E Photovoltaic Systems	☐	☐

Project Name:	Observatory	NRCC-PRF-01-E	Page 7 of 16
Project Address:	Highway 111 Rancho Mirage 92270	Calculation Date/Time:	15:44, Sun, Oct 25, 2015
Compliance Scope:	NewEnvelopeAndMechanical	Input File Name:	Observatory-RM-Martin-15.xml

H. CERTIFICATE OF INSTALLATION, CERTIFICATE OF ACCEPTANCE & CERTIFICATE OF VERIFICATION SUMMARY (NRCI/NRCA/NRCV) –
Documentation Author to indicate which Certificates must be submitted for the features to be recognized for compliance
(Retain copies and verify forms are completed and signed to post in field for Field Inspector to verify).
See Tables G. and H. in MCH and LTI Details Sections for Acceptance Tests and forms by equipment.

Building Component	Compliance Forms *(required for submittal)*	Confirmed Pass	Confirmed Fail
Covered Process	☐ NRCI-PRC-01-E Refrigerated Warehouse	☐	☐
	☐ NRCA-PRC-01-F- Compressed Air Systems	☐	☐
	☐ NRCA-PRC-02-F- Kitchen Exhaust	☐	☐
	☐ NRCA-PRC-03-F- Garage Exhaust	☐	☐
	☐ NRCA-PRC-04-F- Refrigerated Warehouse- Evaporator Fan Motor Controls	☐	☐
	☐ NRCA-PRC-05-F- Refrigerated Warehouse- Evaporative Condenser Controls	☐	☐
	☐ NRCA-PRC-06-F- Refrigerated Warehouse- Air Cooled Condenser Controls	☐	☐
	☐ NRCA-PRC-07F- Refrigerated Warehouse- Variable Speed Compressor	☐	☐
	☐ NRCA-PRC-08-F- Electrical Resistance Underslab Heating System	☐	☐

I. ENVELOPE GENERAL INFORMATION (See NRCC-PRF-ENV-DETAILS for more information)

						Confirmed Pass	Confirmed Fail
1.	Total Conditioned Floor Area	1,150 ft²	5.	Number of Floors Above Grade	1		
2.	Total Unconditioned Floor Area	0 ft²	6.	Number of Floors Below Grade	0		
3.	Addition Conditioned Floor Area	0 ft²					
4.	Addition Unconditioned Floor Area	0 ft²					

7. Opaque Surfaces & Orientation	8. Total Gross Surface Area	9. Total Fenestration Area	10. Window to Wall Ratio	Pass	Fail
North Wall	825 ft²	0 ft²	00.0%	☐	☐
East Wall	496 ft²	0 ft²	00.0%	☐	☐
South Wall	1,227 ft²	0 ft²	00.0%	☐	☐
West Wall	721 ft²	0 ft²	00.0%	☐	☐
Total	**3,269 ft²**	**0 ft²**	**00.0%**	☐	☐
Roof	1,150 ft²	0 ft²	00.0%	☐	☐

Project Name:	Observatory	NRCC-PRF-01-E	Page 8 of 16
Project Address:	Highway 111 Rancho Mirage 92270	Calculation Date/Time:	15:44, Sun, Oct 25, 2015
Compliance Scope:	NewEnvelopeAndMechanical	Input File Name:	Observatory-RM-Martin-15.xml

J. FENESTRATION SUMMARY § 110.6

This Section Does Not Apply

K. OPAQUE SURFACE ASSEMBLY SUMMARY § 120.7/ § 140.3

1. Surface Name	2. Surface Type	3. Area (ft²)	4. Framing Type	5. Cavity R-Value	6. Continuous R-Value	7. U-Factor / F-Factor / C-Factor	8. Status[1]	Pass	Fail
R-0 Roof Cathedral9	Roof	452	NA	0	NA	U-Factor: 0.238	N	☐	☐
R21 Steel Frame11	ExteriorWall	3269	Metal	21	NA	U-Factor: 0.161	N	☐	☐
Slab On Grade22	UndergroundFloor	1150	NA	0	NA	F-Factor: 0.730	N	☐	☐
R-30 Roof Cathedral27	Roof	698	Wood	30	NA	U-Factor: 0.034	N	☐	☐

[1] *Status: N - New, A – Altered, E – Existing*

L. ROOFING PRODUCT SUMMARY § 140.3

1. Product Type	2. Product ≥25 lb ft²	3. Aged Solar Reflectance	4. Thermal Emittance	5. SRI	6. Cool Roof Credit	7. CRRC Product ID Number	Pass	Fail
R-0 Roof Cathedral9	No	0.08	0.75	NA	No	NA	☐	☐
R-30 Roof Cathedral27	No	0.08	0.75	NA	No	NA	☐	☐

M. HVAC SYSTEM SUMMARY (see NRCC-PRF-MCH-DETAILS for more information) § 110.1 / § 110.2

Dry System Equipment [1] (Fan & Economizer info included below in Table N)

1. Equip Name	2. Equip Type	3. System Type (Simple [3] or Complex [4])	4. Qty	5. Total Heating Output (kBtu/h)	6. Supp Heat Source (Y/N)	7. Supp Heat Output (kBtuh)	8. Total Cooling Output (kBtu/h)	9. Efficiency Cooling	9. Efficiency Heating	10. Acceptance Testing Required? (Y/N) [5]	11. Status[6]	Pass	Fail
HVAC 13	SZHP (Split3Phase)	Simple	1	33	No	0	35	SEER-20.5	HSPF-12.0	Yes	N	☐	☐
HVAC 223	SZHP (Split3Phase)	Simple	1	32	No	0	29	SEER-14.2	HSPF-9.8	Yes	N	☐	☐
HVAC 335	SZHP (Split3Phase)	Simple	1	12	No	0	12	SEER-14.2	HSPF-9.8	Yes	N	☐	☐

Project Name:	Observatory	NRCC-PRF-01-E	Page 9 of 16
Project Address:	Highway 111 Rancho Mirage 92270	Calculation Date/Time:	15:44, Sun, Oct 25, 2015
Compliance Scope:	NewEnvelopeAndMechanical	Input File Name:	Observatory-RM-Martin-15.xml

Wet System Equipment [2] / *Pumps*

12. Equip Name	13. Equip Type	14. Qty	15. Vol (gal)	16. Rated Capacity (kBtu/h)	17. Efficiency	18. Standby Loss	19. Tank Ext. R Value	20. Qty	21. GPM	22. HP	23. VSD (Y/N)	24. Status[6]	Pass	Fail
A O Smith ELJF-62	Storage	1	6	5	EF: 0.920	NA	NA	NA	NA	NA	No	N	☐	☐

[1] *Dry System Equipment includes furnaces, air handling units, heat pumps, etc.*
[2] *Wet System Equipment includes boilers, chillers, cooling towers, water heaters, etc.*
[3] *Simple Systems must complete NRCC-CXR-03-E commissioning design review form*
[4] *Complex Systems must complete NRCC-CXR-04-E commissioning design review form*
[5] *A summary of which acceptance tests are applicable is provided in NRCC-PRF-MCH-DETAILS*
[6] *Status: N - New, A – Altered, E – Existing*

Discrepancy between modeled and designed equipment sizing? (If "Yes", see Table F. "Additional Remarks" for an explanation)	No

N. ECONOMIZER & FAN SYSTEMS SUMMARY[1] § 140.4

1. Equip Name	2. Outside Air CFM	3. Supply Fan CFM	HP	BHP	TSP (inch WC)	Control	4. Return Fan CFM	HP	BHP	TSP (inch WC)	Control	5. Economizer Type (if present)	Pass	Fail
HVAC 13	194	1200	0.500	0.500	1.32	ConstantVolume	NA	NA	NA	NA	NA	NoEconomizer	☐	☐
HVAC 223	261	760	0.100	0.100	0.42	ConstantVolume	NA	NA	NA	NA	NA	NoEconomizer	☐	☐
HVAC 335	38	310	0.100	0.100	1.02	ConstantVolume	NA	NA	NA	NA	NA	NoEconomizer	☐	☐

[1] *Mechanical ventilation calculations and exhaust fans are included in the NRCC-PRF-MCH-DETAILS section*

O. EQUIPMENT CONTROLS § 120.2

1. Equip Name	2. Equip Type	3. Controls	Pass	Fail
HVAC 13	SZHP	No DCV Controls No Economizer No Supply Air Temp. Control	☐	☐

Narkweather ARCHITECTS INC.
73 330 HWY 111, SUITE A / PALM DESERT, CA 92260-4016
PHONE: (760) 346-4090 / E-MAIL: info@narkweather.net

OWNERSHIP OF DOCUMENTS DRAWINGS AND SPECIFICATIONS AS INSTRUMENTS OF SERVICE ARE AND SHALL REMAIN THE PROPERTY OF THE DESIGNER WHETHER THE PROJECT FOR WHICH THEY WERE PREPARED IS EXECUTED OR NOT. THEY ARE NOT TO BE USED ON OTHER PROJECTS OR EXTENSIONS TO THIS PROJECT EXCEPT BY AGREEMENT IN WRITING AND WITH APPROPRIATE COMPENSATION TO Narkweather Architects Inc.
COPYRIGHT 2015 Narkweather Architects

CITY OF RANCHO MIRAGE

PROJECT DESCRIPTION: OBSERVATORY — Rancho Mirage Public Library

SITE ADDRESS: 71-100 California 111, Rancho Mirage, CA 92270

SHEET CONTENT: TITLE 24 PLAN

DRAWING SCALE: SCALE: NONE

1	REVISION DATE:
2	REVISION DATE:
3	REVISION DATE:
4	REVISION DATE:
	REVISION DATE:

(PLAN CHECK ENGINEER STAMP)

RECOMMENDED FOR APPROVAL BY:
LELAND E. COLE 9/27/16 DATE
R.C.E. 47159 EXP. 12/31/17
APPROVED BY CITY OF RANCHO MIRAGE:
WILLIAM A. ENOS, CITY ENGINEER DATE
R.C.E. 43910, EXP. 6/30/2017

DRAWING NUMBER
M4.0

Bid Set - 10/07/2016

Project Name:	Observatory	NRCC-PRF-01-E	Page 10 of 16
Project Address:	Highway 111 Rancho Mirage 92270	Calculation Date/Time:	15:44, Sun, Oct 25, 2015
Compliance Scope:	NewEnvelopeAndMechanical	Input File Name:	Observatory-RM-Martin-15.xml

O. EQUIPMENT CONTROLS § 120.2

1. Equip Name	2. Equip Type	3. Controls	Confirmed Pass	Confirmed Fail
HVAC 223	SZHP	No DCV Controls No Economizer No Supply Air Temp. Control	☐	☐
HVAC 335	SZHP	No DCV Controls No Economizer No Supply Air Temp. Control	☐	☐
DWH1 - SHW	Service Hot Water, Primary Only	Fixed Temperature Control, No DDC	☐	☐

P. SYSTEM DISTRIBUTION SUMMARY § 120.4/ § 140.4(i)

This Section Does Not Apply

Does the Project Include Zonal Systems? (If "Yes", see NRCC-PRF-MCH-DETAILS for system information)	No
Does the Project Include a Solar Hot Water System? (If "Yes", see NRCC-PRF-MCH-DETAILS for system information)	No
Multifamily or Hotel/ Motel Occupancy? (If "Yes", see NRCC-PRF-MCH-DETAILS for DHW system information)	No

Q. INDOOR CONDITIONED LIGHTING GENERAL INFO (see NRCC-PRF-LTI-DETAILS for more info)

This Section Does Not Apply

R. INDOOR CONDITIONED LIGHTING SCHEDULE (Adapted from NRCC-LTI-01-E)[1] § 130.0

This Section Does Not Apply

[1] lighting power densities were used in the compliance model Building Departments will need to check prescriptive forms for Luminaire Schedule details.

S1. COVERED PROCESS SUMMARY – ENCLOSED PARKING GARAGES § 140.9

This Section Does Not Apply

S2. COVERED PROCESS SUMMARY – COMMERCIAL KITCHENS § 140.9

This Section Does Not Apply

Project Name:	Observatory	NRCC-PRF-01-E	Page 11 of 16
Project Address:	Highway 111 Rancho Mirage 92270	Calculation Date/Time:	15:44, Sun, Oct 25, 2015
Compliance Scope:	NewEnvelopeAndMechanical	Input File Name:	Observatory-RM-Martin-15.xml

S3. COVERED PROCESS SUMMARY – COMPUTER ROOMS § 140.9

This Section Does Not Apply

S4. COVERED PROCESS SUMMARY – LABORATORY EXHAUSTS § 140.9

This Section Does Not Apply

T. UNMET LOAD HOURS

Thermal Zone Name	Cooling Unmet Load Hour Limit for Thermal Zone	Proposed Cooling Unmet Load Hours	Heating Unmet Load Hour Limit for Thermal Zone	Proposed Heating Unmet Load Hours
2-Cosmic Office	150	250.75	150	0

U. ENERGY USE SUMMARY

	Electric (kWh/yr)	Natural Gas (therms/yr)
Total Annual Baseline	22051.3	153.574
Total Annual Proposed	20528.6	0

Project Name:	Observatory	NRCC-PRF-01-E	Page 12 of 16
Project Address:	Highway 111 Rancho Mirage 92270	Calculation Date/Time:	15:44, Sun, Oct 25, 2015
Compliance Scope:	NewEnvelopeAndMechanical	Input File Name:	Observatory-RM-Martin-15.xml

DOCUMENTATION AUTHOR'S DECLARATION STATEMENT § 10-103

I certify that this Certificate of Compliance documentation is accurate and complete.

Documentation Author Name: Tim Scott	Signature: (signed)
Company: Scott Design and Title 24, Inc,	
Address: 77085 Michigan Drive	Signature Date: 10/25/15
City/State/Zip: Palm Desert CA 92211	CEA Identification (If applicable):
Phone: (760) 200-4780	

RESPONSIBLE PERSON'S DECLARATION STATEMENT

I certify the following under penalty of perjury, under the laws of the State of California:

1. I hereby affirm that I am eligible under the provisions of Division 3 of the Business and Professions Code to sign this document as the person responsible for its preparation; and that I am licensed in the State of California as a civil engineer, mechanical engineer, electrical engineer, or I am a licensed architect.
2. I affirm that I am eligible under the provisions of Division 3 of the Business and Professions Code by section 5537.2 or 6737.3 to sign this document as the person responsible for its preparation; and that I am a licensed contractor performing this work.
3. I affirm that I am eligible under Division 3 of the Business and Professions Code to sign this document because it pertains to a structure or type of work described as exempt pursuant to Business and Professions Code Sections 5537, 5538 and 6737.1.

Responsible Envelope Designer Name: Charles Martin	**Signature:**	
Company: Narkweather Architects, Inc.		
Address: 73-330 Highway 111, Suite A	Date Signed:	
City/State/Zip: Palm Desert CA 92260	Declaration Statement Type:	
Phone: (760) 346-4090	Title:	License #:
Responsible Lighting Designer Name:	**Signature: NOT IN SCOPE**	
Company:		
Address:	Date Signed:	
City/State/Zip:	Declaration Statement Type:	
Phone:	Title:	License #:
Responsible Mechanical Designer Name: Tim Scott	**Signature:** (signed)	
Company: Scott Design and Title 24, Inc.		
Address: 77085 Michigan Drive	Date Signed: 10/25/15	
City/State/Zip: Palm Desert CA 92211	Declaration Statement Type:	
Phone: (760) 200-4780	Title:	License #:

Project Name:	Observatory	NRCC-PRF-01-E	Page 13 of 16
Project Address:	Highway 111 Rancho Mirage 92270	Calculation Date/Time:	15:44, Sun, Oct 25, 2015
Compliance Scope:	NewEnvelopeAndMechanical	Input File Name:	Observatory-RM-Martin-15.xml

NRCC-PRF-ENV-DETAILS -SECTION START-

A. OPAQUE SURFACE ASSEMBLY DETAILS

1. Surface Name	2. Surface Type	3. Description of Assembly Layers	4. Notes	Confirmed Pass	Confirmed Fail
R-0 Roof Cathedral9	Roof	Asphalt shingles - 1/4 in. Vapor permeable felt - 1/8 in. Plywood - 1/2 in. Air - Cavity - Wall Roof Ceiling - 4 in. or more Air - Cavity - Wall Roof Ceiling - 4 in. or more Gypsum Board - 1/2 in.		☐	☐
R21 Steel Frame11	ExteriorWall	Stucco - 7/8 in. Vapor permeable felt - 1/8 in. Metal framed wall, 24in. OC, 5.5in., R-21 Gypsum Board - 1/2 in.		☐	☐
Slab On Grade22	UndergroundFloor			☐	☐
R-30 Roof Cathedral27	Roof	Asphalt shingles - 1/4 in. Vapor permeable felt - 1/8 in. Plywood - 1/2 in. Air - Cavity - Wall Roof Ceiling - 4 in. or more Wood framed roof, 16in. OC, 11.25in., R-30 Gypsum Board - 1/2 in.		☐	☐

B. OVERHANG DETAILS (Adapted from NRCC-ENV-02-E)

This Section Does Not Apply

C. OPAQUE DOOR SUMMARY

1. Opaque Door Assembly Name / Tag or I.D.	2. Door Type	3. Certification Method	4. Operation	5. Overall U-factor	Confirmed Pass	Confirmed Fail
Insulated Metal Door13	MetalInsulatedSwingingDoor	DefaultPerformance	Swinging	0.500	☐	☐

Project Name:	Observatory	NRCC-PRF-01-E	Page 14 of 16
Project Address:	Highway 111 Rancho Mirage 92270	Calculation Date/Time:	15:44, Sun, Oct 25, 2015
Compliance Scope:	NewEnvelopeAndMechanical	Input File Name:	Observatory-RM-Martin-15.xml

NRCC-PRF-MCH-DETAILS -SECTION START-

A. MECHANICAL VENTILATION AND REHEAT *(Adapted from 2013-NRCC-MCH-03-E)*

1. DESIGN AIR FLOWS / 2. VENTILATION (§ 120.1)

CONDITIONED ZONE NAME	HEATING / COOLING SYSTEM ID	DESIGN PRIMARY AIR FLOW (CFM)	DESIGN PRIMARY MINIMUM AIR FLOW (CFM)	MINIMUM PRIMARY AIR FLOW FRACTION	MAXIMUM HEATING AIR FLOW (CFM)	MAXIMUM HEATING AIR FLOW FRACTION	DDC CONTROL (Y/N)	VENT SYSTEM ID	CONDITIONED AREA (ft2)	MIN. VENT PER AREA (CFM/ft2)	DESIGN NUM. OF PEOPLE	MIN. VENT PER PERSON (CFM/person)	REQ'D VENT AIR FLOW (CFM)	DESIGN VENT AIR FLOW (CFM)	TRANSFER AIRFLOW (CFM)	DCV (Y/N)	Confirmed Pass	Confirmed Fail
1-Observatory	HVAC 13	1,200	NA	NA	NA	NA	N	HVAC 13	452	0.21	13	7.5	97	194	NA	N	☐	☐
2-Cosmic Office	HVAC 223	760	NA	NA	NA	NA	N	HVAC 223	610	0.21	17	7.5	131	261	NA	N	☐	☐
3-Restroom	HVAC 335	310	NA	NA	NA	NA	N	HVAC 335	88	0.21	3	7.5	19	38	NA	N	☐	☐
								TOTAL	1,150		33		247	493	NA		☐	☐

B. ZONAL SYSTEM AND TERMINAL UNIT SUMMARY § 140.4

1. System ID	2. System Type	3. Qty	4. Rated Capacity (kBtuh) Heating	Cooling	5. Economizer	6. Zone Name	7. Airflow (cfm) Design	Min.	Min. Ratio	8. Fan BHP	Cycles	ECM Motor	Confirmed Pass	Confirmed Fail
Observatory5-TRM	Uncontrolled	1	NA	NA	NA	1-Observatory	1200	NA	NA	NA	NA	☐	☐	☐
Cosmic Office25-TRM	Uncontrolled	1	NA	NA	NA	2-Cosmic Office	760	NA	NA	NA	NA	☐	☐	☐
Restroom37-TRM	Uncontrolled	1	NA	NA	NA	3-Restroom	310	NA	NA	NA	NA	☐	☐	☐

C. EXHAUST FAN SUMMARY

This Section Does Not Apply

Project Name:	Observatory	NRCC-PRF-01-E	Page 15 of 16
Project Address:	Highway 111 Rancho Mirage 92270	Calculation Date/Time:	15:44, Sun, Oct 25, 2015
Compliance Scope:	NewEnvelopeAndMechanical	Input File Name:	Observatory-RM-Martin-15.xml

D. DHW EQUIPMENT SUMMARY – *(Adapted from NRCC-PLB-01)* § 110.3

1. DHW Name	2. Fuel	3. Type	4. Qty	5. Distribution Type	6. Rated Input kBtuh	7. Efficiency	8. Pilot Energy (Btu/h)	9. External Tank Insulation	10. Vol	11. Standby Loss	12. Vol. of Suppl. Storage Tank	Confirmed Pass	Confirmed Fail
A O Smith ELJF-62	Electricity	Storage	1	Nonrecirculating	5	EF: 0.920	0	NA	6	0	NA	☐	☐

E. MULTI-FAMILY CENTRAL DHW SYSTEM DETAILS

This Section Does Not Apply

F. SOLAR HOT WATER HEATING SUMMARY (Adapted from NRCC-STH-01)

This Section Does Not Apply

G. MECHANICAL HVAC ACCEPTANCE TESTS & FORMS *(Adapted from 2013-NRCC-MCH-01-E)* § RA4

Declaration of Required Acceptance Certificates (NRCA) – Acceptance Certificates that may be submitted. (Retain copies and verify forms are completed and signed to post in field for Field Inspector to verify).

Test Description / Equipment Requiring Testing or Verification	# of units	MCH-02A Outdoor Air	MCH-03A Single Zone Unitary	MCH-04A Air Dist. Ducts	MCH-05A Economizer Controls	MCH-06A DCV	MCH-07A Supply Fan VAV	MCH-08A Valve leakage	MCH-09A Supply Water Temp. Reset	MCH-10A Hyd. Variable Flow Control	MCH-11A Auto Demand Shed Control	MCH-12A FDD for DX Units	MCH-13A Auto FDD for Air & Zone	MCH-14A Dist. Energy Storage DX AC	MCH-15A TES Systems	MCH-16A Supply Air Temp. Reset	MCH-17A Condenser Water Reset Controls	MCH-18A ECMS	Confirmed Pass	Confirmed Fail
DWH1 - SHW	1	-	-	-	-	-	-	-	-	-	-	-	-	-	-	-	-	-	☐	☐
HVAC 13	1	X	X	-	-	-	X	-	-	-	-	-	-	-	-	-	-	-	☐	☐
HVAC 223	1	X	X	-	-	-	-	-	-	-	-	-	-	-	-	-	-	-	☐	☐
HVAC 335	1	X	X	-	-	-	-	-	-	-	-	-	-	-	-	-	-	-	☐	☐

Project Name:	Observatory	NRCC-PRF-01-E	Page 16 of 16
Project Address:	Highway 111 Rancho Mirage 92270	Calculation Date/Time:	15:44, Sun, Oct 25, 2015
Compliance Scope:	NewEnvelopeAndMechanical	Input File Name:	Observatory-RM-Martin-15.xml

NRCC-PRF-LTI-DETAILS -SECTION START-

A. INDOOR CONDITIONED LIGHTING CONTROL CREDITS (Adapted from NRCC-LTI-02-E) § 140.6

This Section Does Not Apply

B. INDOOR CONDITIONED LIGHTING MANDATORY LIGHTING CONTROLS (Adapted from NRCC-LTI-02-E) § 130.1

This Section Does Not Apply

C. TAILORED METHOD LIGHTING POWER ALLOWANCE SUMMARY AND CHECKLIST (Adapted from NRCC-LTI-04-E) § 140.6

This Section Does Not Apply

D. GENERAL LIGHTING POWER (Adapted from NRCC-LTI-04-E) § 140.6-D

This Section Does Not Apply

E. GENERAL LIGHTING FROM SPECIAL FUNCTION AREAS (Adapted from NRCC-LTI-04-E) § 140.6(c) 3H

This Section Does Not Apply

F. ROOM CAVITY RATIO (Adapted from NRCC-LTI-04-E)

This Section Does Not Apply

G. ADDITIONAL "USE IT OR LOSE IT" (Adapted from NRCC-LTI-04-E)

This Section Does Not Apply

H. INDOOR & OUTDOOR LIGHTING ACCEPTANCE TESTS & FORMS (Adapted from NRCC-LTI-01-E and NRCC-LTO-01-E) § 130.4

This Section Does Not Apply

ENVELOPE MANDATORY MEASURES: NONRESIDENTIAL — ENV-MM

Project Name: *Observatory* — Date: *10/25/2015*

DESCRIPTION

Building Envelope Measures:

- §110.8(a): Installed insulating material shall have been certified by the manufacturer to comply with the California Quality Standards for insulating material, Title 20 Chapter 4, Article 3.
- §110.8(c): All Insulating Materials shall be installed in compliance with the flame spread rating and smoke density requirements of Sections 2602 and 707 of Title 24, Part 2.
- §110.8(f): The opaque portions of framed demising walls in nonresidential buildings shall have insulation with an installed R-value of no less than R-13 between framing members.
- §110.7(a): All Exterior Joints and openings in the building that are observable sources of air leakage shall be caulked, gasketed, weatherstripped or otherwise sealed.
- §110.6(a): Manufactured fenestration products and exterior doors shall have air infiltration rates not exceeding 0.3 cfm/ft² of window area, 0.3 cfm/ft² of door area for residential doors, 0.3 cfm/ft² of door area for nonresidential single doors (swinging and sliding), and 1.0 cfm/ft² for nonresidential double doors (swinging).
- §110.6(a): Fenestration U-factor shall be rated in accordance with NFRC 100, or the applicable default U-factor.
- §110.6(a): Fenestration SHGC shall be rated in accordance with NFRC 200, or NFRC 100 for site-built fenestration, or the applicable default SHGC.
- §110.6(b): Site Constructed Doors, Windows and Skylights shall be caulked between the unit and the building, and shall be weatherstripped (except for unframed glass doors and fire doors).

Narkweather ARCHITECTS INC.

73 330 HWY 111, SUITE A / PALM DESERT, CA 92260-4016
PHONE: (760) 346-4090 / E-MAIL: info@narkweather.net

OWNERSHIP OF DOCUMENTS DRAWINGS AND SPECIFICATIONS AS INSTRUMENTS OF SERVICE ARE AND SHALL REMAIN THE PROPERTY OF THE DESIGNER WHETHER THE PROJECT FOR WHICH THEY WERE PREPARED IS EXECUTED OR NOT. THEY ARE NOT TO BE USED ON OTHER PROJECTS OR EXTENSIONS TO THIS PROJECT EXCEPT BY AGREEMENT IN WRITING AND WITH APPROPRIATE COMPENSATION TO Narkweather Architects Inc.
COPYRIGHT 2015 Narkweather Architects

CITY OF RANCHO MIRAGE

PROJECT DESCRIPTION: O B S E R V A T O R Y — Rancho Mirage Public Library
SITE ADDRESS: 71-100 California 111, Rancho Mirage, CA 92270

SHEET CONTENT: TITLE 24 PLAN

DRAWING SCALE: SCALE: NONE

1	REVISION DATE:
2	REVISION DATE:
3	REVISION DATE:
4	REVISION DATE:
	REVISION DATE:

(PLAN CHECK ENGINEER STAMP)
RECOMMENDED FOR APPROVAL BY:
LELAND E. COLE 9/27/16 DATE
R.C.E. 47159 EXP. 12/31/17
APPROVED BY CITY OF RANCHO MIRAGE:
WILLIAM A. ENOS, CITY ENGINEER DATE
R.C.E. 43910, EXP. 6/30/2017

DRAWING NUMBER: M4.1

Bid Set - 10/07/2016

GENERAL

1. THE FOLLOWING NOTES REFLECT THE REQUIREMENTS OF THE ELECTRICAL CONTRACTOR TO PROVIDE AND INSTALL A COMPLETE AND OPERABLE ELECTRICAL SYSTEM.
2. IT IS THE RESPONSIBILITY OF THE CONTRACTOR TO PROVIDE ALL MATERIALS, CONDUIT, WIRING, CONTROL DEVICES AND EQUIPMENT REQUIRED TO INSURE ALL SYSTEMS ARE COMPLETE AND OPERABLE.
3. THE DIAGRAMS AND SYMBOLS ILLUSTRATED ON THESE DRAWINGS REFLECT THE INTENT OF THE ELECTRICAL SYSTEMS AND ARE SHOWN DIAGRAMATICALLY.
4. THE CONTRACTOR SHALL REVIEW THE COMPLETE SET OF CONSTRUCTION DOCUMENTS AND VISIT THE PROJECT EXISTING CONDITIONS PRIOR TO SUBMITTING BIDS.
5. THE CONTRACTOR SHALL MAINTAIN A COMPLETE SET OF CONSTRUCTION DOCUMENTS, SPECIFICATIONS, SHOP DRAWINGS, ADDENDUM'S AND CHANGE ORDERS ON THE JOB SITE.
6. THE ELECTRICAL CONTRACTOR SHALL NOTIFY THE PROJECT MANAGER AND ARCHITECT SHOULD A CONFLICT EXIST BETWEEN THESE DRAWINGS AND THE ACTUAL FIELD CONDITIONS.
7. COORDINATE THE INSTALLATION OF THE ELECTRICAL SYSTEMS WITH ALL PROJECT TRADES AND NOTIFY THE PROJECT MANAGER IF A CONFLICT EXISTS.
8. THE ELECTRICAL CONTRACTOR SHALL PROVIDE A WARRANTEE FOR THE ELECTRICAL WORK INCLUDING MATERIALS, EQUIPMENT AND WORKMANSHIP FOR A PERIOD OF ONE (1) YEAR AFTER ACCEPTANCE OF THE PROJECT BY THE OWNER. NO ADDITIONAL COST FOR LABOR OR REPLACEMENT OF PARTS, MATERIALS AND EQUIPMENT SHALL BE INCURRED BY THE OWNER.
9. RETURN OPERATING MANUALS, COPIES OF SHOP DRAWINGS, BROCHURES AND EQUIPMENT WARRANTIES TO THE OWNER AT THE COMPLETION OF THE PROJECT.
10. MAINTAIN AND UPDATE DAILY A COMPLETE SET OF AS-BUILT ELECTRICAL DOCUMENTS AND RETURN TO THE PROJECT MANAGER AT THE END OF THE PROJECT.
11. ELECTRICAL EQUIPMENT SHALL BE BRACED OR ANCHORED TO RESIST A HORIZONTAL FORCE ACTING IN ANY DIRECTION USING THE SEISMIC DESIGN CRITERIA AS DETAILED ON THESE PLANS, EXCEPT FOR THE FOLLOWING:
    a. EQUIPMENT WEIGHING LESS THAN 400 POUNDS SUPPORTED DIRECTLY ON THE FLOOR OR ROOF.
    b. FURNITURE (NON AND MOVABLE AS EXEMPTED BY THE CBC 2013 APPENDIX CHAPTER 1 SECTION 105.2)
    c. TEMPORARY OR MOVABLE EQUIPMENT (NON FIXED AND MOVABLE AS EXEMPTED BY THE CBC 2013 APPENDIX CHAPTER 1 SECTION 105.2)
    d. EQUIPMENT WEIGHING LESS THAN 20 POUNDS SUPPORTED BY VIBRATION ISOLATORS.
    e. EQUIPMENT WEIGHING LESS THAN 20 POUNDS SUSPENDED FROM A ROOF OR FLOOR OR HUNG FROM A WALL.
12. PROVIDE A DEDICATED ELECTRICAL CIRCUIT FOR THE PROJECT PIV DEVICE. COORDINATE THE LOCATION IN THE FIELD.
13. PROVIDE A DEDICATED ELECTRICAL CIRCUIT FOR THE PROJECT IRRIGATION CONTROLLERS. COORDINATE THE LOCATION WITH THE LANDSCAPE DRAWINGS AND LANDSCAPE ARCHITECT.

REGULATIONS, CODES AND PERMITS

1. THE COMPLETE ELECTRICAL SYSTEM SHALL BE INSTALLED IN ACCORDANCE WITH THE FOLLOWING CODES:
    a. 2013 CALIFORNIA BUILDING STANDARDS ADMINISTRATIVE CODE, PART 1, TITLE 24, CALIFORNIA CODE OF REGULATIONS (CCR)
    b. 2013 CALIFORNIA BUILDING CODE, PART 2, TITLE 24, CCR
    c. 2013 CALIFORNIA ELECTRICAL CODE, PART 3, TITLE 24, CCR
    d. 2013 CALIFORNIA MECHANICAL CODE, PART 4, TITLE 24, CCR
    e. 2013 CALIFORNIA PLUMBING CODE, PART 5, TITLE 24, CCR
    f. 2013 CALIFORNIA FIRE CODE, PART 9, TITLE 24, CCR
2. NOTHING ON THE DRAWINGS, GENERAL NOTES OR SPECIFICATIONS IS TO BE INTERPRETED AS PERMITTING WORK NOT CONFORMING WITH ANY CODE, REGULATION OR CITY ORDINANCES.

EXISTING CONDITIONS

1. WHEN APPLICABLE, THE CONTRACTOR SHALL VERIFY EXISTING SITE AND/OR BUILDING CONDITIONS AND NOTIFY THE PROJECT MANAGER AND ARCHITECT IF A CONFLICT EXISTS.
2. NOTIFY UNDERGROUND DIG ALERT (811) TO IDENTIFY EXISTING UNDERGROUND STRUCTURES PRIOR TO BEGINNING UNDERGROUND WORK.
3. CONTACT THE PROJECT MANAGER AND ARCHITECT WHEN IT BECOMES NECESSARY TO CORE, DRILL OR CUT THROUGH EXISTING CONDITIONS. REPAIRS SHALL BE MADE TO THE SATISFACTION OF THE ARCHITECT.

MATERIALS

1. ELECTRICAL MATERIALS AND PARTS SHALL BE PROVIDED BY THE SAME MANUFACTURE FOR EACH CLASS OR GROUP OF MATERIALS.
2. ALL MATERIALS, PARTS AND EQUIPMENT SHALL BE NEW UNLESS OTHERWISE NOTED.
3. EXISTING MATERIALS, PARTS AND EQUIPMENT TO BE RE-USED SHALL BE CLEANED AND REPAIRED.
4. ALL CONDUCTORS AND EQUIPMENT SHALL BE ACCEPTABLE ONLY IF APPROVED. EQUIPMENT SHALL BE APPROVABLE IF IT IS LISTED, LABELED OR CERTIFIED FOR ITS USE BY A NATIONALLY RECOGNIZED TESTING LABORATORY (NRTL) AS RECOGNIZED BY THE U.S. DEPARTMENT OF LABOR, OCCUPATIONAL SAFETY AND HEALTH ADMINISTRATION PER SECTION 110.2 OF THE CALIFORNIA ELECTRICAL CODE.

GROUNDING

1. THE COMPLETE ELECTRICAL SYSTEM SHALL BE GROUNDED IN ACCORDANCE WITH ARTICLE 250 – GROUNDING, OF THE CALIFORNIA ELECTRICAL CODE (CEC).
2. VERIFY SYSTEM GROUNDING REQUIREMENTS AND PROVIDE GROUND RODS AS REQUIRED TO INSURE THAT THE RESISTANCE TO GROUND IS 25 OHMS OR LESS.
3. THE COMPLETE ELECTRICAL SYSTEM SHALL BE TESTED TO INSURE COMPLIANCE GROUNDING REQUIREMENTS.
4. THE METHOD OF OBTAINING GROUND RESISTANCE SHALL BE IN ACCORDANCE WITH THE LATEST EDITION OF THE JAMES G. BIDDLE MANUAL PUBLISHED ON THE SUBJECT.

SHOP DRAWINGS AND SUBSTITUTIONS

1. THE CONTRACTOR SHALL NOT RELEASE ELECTRICAL EQUIPMENT OR LIGHTING FIXTURES UNTIL SHOP DRAWINGS HAVE BEEN SUBMITTED AND REVIEWED.
2. PRODUCT SUBSTITUTIONS WILL ONLY BE ALLOWED AFTER THE PROJECT PLANS AND SPECIFICATIONS ARE BID AS SPECIFIED.
3. SUBSTITUTIONS WILL ONLY BE CONSIDERED DURING THE SHOP DRAWING PROCESS AND ONLY IF THE SUBMITTAL INCLUDES UNIT PRICES FOR EACH SPECIFIED AND ALTERNATE PRODUCTS AND A TOTAL PROJECT SAVINGS.
4. SUBSTITUTION PRODUCTS SHALL BE EQUAL TO THE PERFORMANCE, QUALITY AND WORKMANSHIP OF THE SPECIFIED PRODUCT. WORKING SAMPLES MAY BE REQUIRED.
5. SHOP DRAWINGS SHALL BE PROVIDED FOR THE FOLLOWING ITEMS; GENERAL ELECTRICAL MATERIALS, CONDUIT AND WIRE, SWITCHGEAR, PANELS, TRANSFORMERS, LIGHTING FIXTURES, LAMPS, CONTROL EQUIPMENT, FIRE ALARM SYSTEMS, AND SPECIAL SYSTEMS NOTED ON DRAWINGS OR SPECIFICATIONS.
6. ELECTRICAL EQUIPMENT, PARTS AND MATERIALS SHALL BE RELEASED TO INSURE THE CONSTRUCTION SCHEDULE IS NOT JEOPARDIZED DUE TO LATE DELIVERIES.

SERVICE AND DISTRIBUTION EQUIPMENT

1. PANEL BOARDS WITH MOLDED CASE CIRCUIT BREAKERS SHALL SHALL BE FURNISHED WITH HINGED LOCKABLE DOORS THAT ARE KEYED ALIKE, INDEX CARD HOLDERS AND PERMANENT DEVICE NUMBERS. PANELS SHALL BE AS MANUFACTURED BY SEIMANS, CUTLER-HAMMER OR EQUAL.
2. SEPARATE COMPARTMENTS ABOVE PANEL BOARDS SHALL BE PROVIDED FOR TIME CLOCKS, RELAYS ETC. AS REQUIRED.
3. REFER TO PANEL SCHEDULES FOR PANEL MOUNTING REQUIREMENTS, VOLTAGE AND INDIVIDUAL DEVICE REQUIREMENTS.
4. CIRCUIT BREAKERS SHALL BE BOLT-ON TYPE UNLESS OTHERWISE NOTED, WITH A MINIMUM GROUND FAULT RATING OF 10,000 AIC. FOR 120/208 SYSTEMS.
5. PROVIDE WIRE GUTTERS BELOW AND ABOVE PANEL BOARDS TO FACILITATE MULTIPLE BRANCH CIRCUIT CONDUITS.
6. NO PIPES, DUCTS OR EQUIPMENT FORIEGN TO THE ELECTRICAL SYSTEM SHALL BE PERMITTED TO BE LOCATED WITHIN THE DEDICATED SPACE ABOVE THE MAIN SWITCHBOARD, DISTRIBUTION OR ELECTRICAL PANELS.
7. FEEDER CONNECTIONS AT ALL ELECTRICAL DISTRIBUTION EQUIPMENT SHALL BE TIGHTENED BEFORE GROUND TESTS ARE TAKEN.
8. PROVIDE ENGRAVED NAMEPLATES ON THE SWITCHBOARD AND DEVICES, DISTRIBUTION PANELS AND DEVICES, PANEL BOARDS AND TRANSFORMERS. NAMEPLATES SHALL BE 3 PLY AND PERMANENTLY ATTACHED WITH STAINLESS STEEL LOCKING SCREWS. FOR EQUIPMENT ON THE NORMAL BRANCH SYSTEM, PROVIDE BLACK FACE AND WHITE CORE. FOR EQUIPMENT ON THE ESSENTIAL ELECTRICAL SYSTEM BRANCH, PROVIDE RED FACE AND WHITE CORE.
9. SAFETY SWITCHES SHALL BE 600 VOLT OR 250 VOLT AC AS APPLICABLE, NEMA TYPE HD, QUICK-MAKE, QUICK-BREAK, HP RATED, NON-FUSIBLE OR FUSIBLE AS INDICATED ON THE DRAWINGS, CLASS "R" IN NEMA TYPE 1 ENCLOSURE, LOCKABLE IN THE "OPEN" AND "CLOSED" POSITIONS WITH NUMBER OF POLES AND AMPERAGE AS INDICATED ON THE DRAWINGS. PROVIDE WEATHERPROOF (NEMA 3R) ENCLOSURES WHEN DEVICES ARE LOCATED IN EXTERIOR LOCATIONS, KITCHENS, HVAC AND PLUMBING EQUIPMENT LOCATIONS AND WHERE WATER IS PRESENT OR WHERE INDICATED AS "WP".
10. SAFETY SWITCHES SHALL BE MOUNTED ON UNISTRUT SUPPORTS AND CONNECTED TO EQUIPMENT WITH LIQUID TIGHT FLEXIBLE CONDUITS. ROOF MOUNTED UNISTRUT SUPPORTS SHALL BE INSTALLED BEFORE THE ROOF IS SEALED.
11. THE CONTRACTOR SHALL CONFIRM THAT EQUIPMENT WORKING SPACE AND GUARDING MEETS THE INTENT OF THE APPLICABLE CODE. REFER TO CEC ARTICLE 110.26 FOR REQUIREMENTS.
12. APPLICABLE EQUIPMENT MANUFACTURER'S SHALL BE RSE SIERRA, SIEMENS, GENERAL ELECTRIC, SQUARE D OR WESTINGHOUSE.

BRANCH CIRCUITING

1. BRANCH CONDUIT AND WIRE HASH MARKS MAY NOT BE DEPICTED ON THE DRAWINGS. THE CONTRACTOR SHALL PROVIDE BRANCH CONDUITS AND WIRING TO ALL CIRCUITS INDICATED AND AS REQUIRED FOR A COMPLETE AND OPERABLE BRANCH CIRCUIT DISTRIBUTION SYSTEM IN ACCORDANCE WITH THE 2007 CALIFORNIA ELECTRICAL CODE.
2. MINIMUM CONDUCTOR SIZE SHALL BE #12 COPPER WITH A MINIMUM CONDUIT SIZE OF 3/4".
3. PROVIDE A GREEN GROUND CONDUCTOR IN ALL BRANCH CIRCUIT AND FEEDER CABLES OR CONDUITS.
4. AT THE END OF THE PROJECT, THE CONTRACTOR SHALL PROVIDE A DETAILED AS-BUIT DRAWING TO THE OWNER AND ENGINEER.

OUTLET, JUNCTION AND PULL BOXES

1. BOXES OR SPLICE BOX ENCLOSURES SHALL SIZED AND INSTALLED IN ACCORDANCE WITH THE ELECTRICAL CODE ARTICLE 314. BOXES LOCATED OUTDOORS, WET OR DAMP LOCATIONS SHALL BE WEATHERPROOF.
2. THE MINIMUM SIZE UNDERGROUND PULL BOXES SHALL BE 11"x18"X12" DEEP WITH BOLT DOWN COVERS LABELED TO INDICATE THE PULL BOX SYSTEM. PROVIDE TRAFFIC COVERS IN WALKS, DRIVEWAYS AND PARKING LOTS. OLDCASTLE PRECAST #S1118B12AA OR EQUAL.
3. LARGE PULL BOXES SHALL BE SIZED IN ACCORDANCE WITH THE ELECTRICAL CODE REQUIREMENTS FOR CABLE PULLING, AND CONDUIT SIZE. OLDCASTLE PRECAST OR APPROVED EQUAL.
4. OUTLET BOXES FOR GFCI RECEPTACLE DEVICES LOCATED OUTDOORS SHALL BE WEATHERPROOF TYPE WITH HINGED LOCKABLE DOOR AS MANUFACTURED BY PASS & SEYMOUR #4600/4600-26/4609-KEY.
5. OUTLET BOXES INSTALLED IN RATED WALL LOCATIONS SHALL BE RATED BOXES OR INSTALLED WITH FIRESTOP PUTTY PADS AS MANUFACTURED BY SPECSEAL OR EQUAL.
6. PROVIDE OUTLET BOX SUPPORTS AND BRACING AT ALL LOCATIONS INTENDED FOR PENDENT LIGHT FIXTURES, FANS, ETC.
7. VERIFY THE MOUNTING HEIGHT OF ALL OUTLET BOXES PRIOR TO INSTALLATION. COORDINATE WITH OTHER TRADES AND CONSTRUCTION DOCUMENTS.
8. OUTLETS BOXES (POWER, DATA, ETC.) INSTALLED AT COUNTER LOCATIONS SHALL BE INSTALLED HORIZONTALLY 6" ABOVE THE COUNTER SPLASH. COORDINATE ALL COUNTER LOCATIONS WITH THE ARCHITECTURAL DRAWINGS AND PROJECT MANAGER.
9. OUTLET BOXES INTENDED FOR WALL SCONCE LIGHTING, RECEPTACLES AND SWITCH DEVICES SHALL BE INSTALLED TO MEET ADA REQUIREMENTS.
10. OUTLETS INSTALLED IN FLUSH FLOOR BOXES SHALL BE INSTALLED IN A FSR, INC. PASS THRU FLOOR BOX #FL-710 IN CARPETED AREAS ONLY. IN NON CARPETED AREAS USE WIREMOLD #RFB11 OR RFB9 RECESSED FLOOR BOX. VERIFY LOCATION AND INSTALLATION WITH CONCRETE FLOOR POUR.
11. OUTLET BOXES SHALL BE INSTALLED TO WITHIN 1/4" OF THE FINISHED NON-COMBUSTIBLE WALL OR CEILING AND FLUSH WITH COMBUSTIBLE MATERIALS IN ACCORDANCE WITH ARTICLE 314.20. REFER TO ARCHITECTURAL FINISH SCHEDULE FOR WALL AND CEILING FINISHES.
12. JUNCTION, OUTLET AND PULL BOXES SHALL BE PERMANENTLY MARKED INDICATING THE ELECTRICAL AND CIRCUITS INSTALLED.

CONDUIT

1. ELECTRICAL METALLIC TUBING UP TO 4" SHALL BE USED AS PERMITTED BY THE ELECTRICAL CODE.
2. PVC SCHEDULE 40 CONDUITS SHALL BE USED FOR UNDERGROUND INSTALLATIONS WHEN CONDUIT IS IN CONTACT WITH EARTH.
3. CONDUIT RISERS SHALL BE GALVANIZED OR PVC WITH HALF LAPPED IMC TAPE COVERING.
4. RIDGED GALVANIZED CONDUIT SHALL BE USED IN WET OR DAMP AREAS, ON ROOFS, EMBEDDED IN CONCRETE OR MASONRY WALLS AND EXPOSED IN ALL AREAS WHERE CONDUIT IS EXPOSED TO PHYSICAL DAMAGE.
5. LIQUID TIGHT FLEXIBLE CONDUITS SHALL BE USED FOR ALL FINAL CONNECTIONS TO MOTORS AND CONTROL DEVICES MOUNTED ON VIBRATING OR ROTATING EQUIPMENT.
6. ALUMINUM FLEXIBLE CONDUITS MAY BE USED FOR CONNECTION TO LIGHTING FIXTURES INSTALLED IN SUSPENDED CEILING AREAS.
7. THE MINIMUM CONDUIT SIZE PERMITTED SHALL BE 3/4".
8. PROVIDE GALVANIZED SEAMLESS COUPLINGS AND CONNECTORS (SET SCREW OR COMPRESSION TYPE) WITH FACTORY APPLIED INSULATED THROAT. DEVICES SHALL BE USED IN ACCORDANCE WITH THE ARTICLE 358 – ELECTRICAL METALLIC TUBING.
9. CONDUITS INSTALLED UNDER GROUND SHALL BE INSTALLED A MINIMUM OF 18" BELOW FINISHED GRADE. CONDUITS INSTALLED UNDER STREETS AND PARKING AREAS SHALL BE INSTALLED 24" BELOW FINISHED GRADE.
10. CONDUIT RUNS FOR UNDERGROUND FEEDERS RUN OUTSIDE OF THE BUILDING SHALL BE INSTALLED 24" BELOW GRADE.
11. CONDUITS STUBBED OUTSIDE OF THE BUILDING SHALL BE PROVIDED WITH A CONCRETE CAP ABOVE THE CONDUIT LOCATION. PROVIDE A BRASS PLATE OR CONCRETE MARKER INDICATING THE QUANTITY OF CONDUITS, LOCATION AND SIZES
12. PROVIDE A CODE SIZED COPPER GROUND CONDUCTOR IN ALL UNDERGROUND PVC CONDUIT SYSTEMS. ELECTRICAL METALLIC RACEWAY SYSTEMS SHALL BE GROUNDED TO THE SAME GROUND SYSTEM.
13. EXPOSED CONDUIT SHALL BE INSTALLED PARALLEL TO AND AT RIGHT ANGLES WITH THE BUILDING FLOOR. EXPOSED CONDUITS SHALL BE GALVANIZED WHEN INSTALLED BELOW 9 FEET. EXPOSED CONDUITS ARE NOT APPROVED IN PLUBLIC AREAS.
14. EXPOSED CONDUITS THAT PENETRATE WALLS OR CEILINGS SHALL BE MADE WITH 90 DEGREE "LB" CONDUIT BODIES FOR EMT OR RIGID CONDUITS AT PENETRATION POINTS. CONDUIT SWEEP PENETRATIONS ARE NOT ACCEPTABLE.
15. CONDUIT INSTALLED WITHOUT CONDUCTORS SHALL BE INSTALLED WITH PULL ROPES, CONDUIT CAPS AND PERMANENTLY LABELED TO ITS DESTINATION AND SYSTEM.
16. PENETRATIONS THROUGH FIRE RATED WALLS, CEILINGS AND FLOORS SHALL BE MADE MADE WITH APPROVED FIRE RATED MATERIALS TO MAINTAIN THE FIRE RATING OF THE ASSEMBLY. FIRE RATING MATERIALS SHALL BE AS MANUFACTURED BY HILTI OR 3M.
17. PROVIDE 3/4" CONDUIT FROM TELEPHONE AND TELEVISION OUTLETS TO THEIR RESPECTIVE BACKBOARDS OR TERMINAL CABINETS.
18. CONDUITS CROSSING BUILDING EXPANSION AND/OR SEISMIC JOINTS SHALL BE PROVIDED WITH EXPANSION/DEFLECTION FITTINGS AT THE EXPANSION AND/OR SEISMIC JOINT. FITTINGS SHALL BE MANUFACTURED BY O.Z. COMPANY. TYPE DX FITTINGS SHALL BE USED.
19. MC CABLE IS NOT ACCEPTABLE FOR THIS PROJECT.

DEVICES

1. SWITCHES SHALL HAVE A RATING OF 20 AMPERE AND BE TOTALLY ENCLOSED TOGGLE TYPE WITH 277V A.C. RATING FOR FULL CAPACITY. MANUFACTURED BY PASS & SEYMOUR, HUBBELL OR LEVITON.
2. DEVICE AND COVER PLATE COLORS SHALL BE COORDINATED WITH THE PROJECT MANAGER AND ARCHITECT PRIOR TO INSTALLATION.
3. RECEPTACLES SHALL BE GROUNDED TYPE 120 VOLT RATED AT 20 AMPERE TOTALLY ENCLOSED. MANUFACTURED BY PASS & SEYMOUR, HUBBELL OR LEVITON.
4. GFCI RECEPTACLES SHALL BE PROVIDED AT LOCATIONS INDICATED AND IN ACCORDANCE WITH THE CALIFORNIA ELECTRICAL CODE ARTICLE 210.8.
5. SPECIFICATION GRADE SWITCHES AND RECEPTACLES SHALL BE PROVIDED. MANUFACTURED BY PASS & SEYMOUR, HUBBELL OR LEVITON.
6. MULTIPLE SWITCHES AT THE SAME LOCATION WHICH CONTROL DIFFERENT VOLTAGES SHALL BE INSTALLED IN A BARRIERED BOX WITH A COMMON COVER PLATE. PROVIDE A VISIBLE LABEL IN THE BOX THAT LISTED THE VOLTAGES.

CONDUCTORS & WIRING

1. ALL CONDUCTORS SHALL BE COPPER WITH AMPACITY RATINGS IN ACCORDANCE WITH ARTICLE 310.15 AND TABLE 310.16.
2. ALUMINUM CONDUCTORS ARE NOT APPROVED FOR THIS PROJECT.
3. CONDUCTORS SHALL BE CODE GRADE THHN/THWN (DRY/WET) 600 VOLT 75 DEGREE C. COPPER WITH MARKINGS (24" O.C.) INDICATING MANUFACTURE, WIRE TYPE, AMPERAGE AND SIZE.
4. THE MINIMUM WIRE SIZE SHALL BE #12 AWG SOLID. WIRE SIZE #8 AND LARGER SHALL BE COPPER STRANDED.
5. SOLDERLESS CONNECTORS AND TERMINALS SHALL BE USED FOR TERMINATING STRANDED CONDUCTORS #8 AND LARGER. APPROVED MANUFACTURES ARE BURNDY OR T&B.
6. BRANCH CIRCUIT AND FIXTURE WIRING, SPLICES AND TAPS FOR CONDUCTORS #10 AND SMALLER SHALL BE MADE WITH UL LISTED 600 VOLT CONNECTORS AS MANUFACTURED BY IDEAL OR SCOTCHLOCK.
7. CONDUCTORS IN PANELS, TERMINAL CABINETS, PULL BOXES AND WIRING GUTTERS SHALL BE NEATLY GROUPED AND TAPES TOGETHER WITH 3M "SCOTCH #33 PLASTIC ELECTRICAL TAPE OR T&B #TY-RAP CABLE STRAPS.
8. REMOVE ALL DEBRIS AND MOISTURE FROM CONDUITS, BOXES AND CABINETS BEFORE THE INSTALLATION OF CONDUCTORS.
9. WHEN REQUIRED MINERALAC OR LINSEED SOAP ARE APPROVED WIRE PULLING COMPOUNDS. OIL, GREASE OR SIMILAR SUBSTANCES ARE NOT APPROVED AS PULLING COMPOUNDS.
10. ALL CONDUCTORS SHALL BE PERMANENTLY TAGGED TO INDICATE SYSTEM OR CIRCUIT NUMBER.
11. LOW VOLTAGE CONDUCTORS FOR HVAC AND OTHER SYSTEMS REQUIRING LOW VOLTAGE CONTROL SIGNALS SHALL SIZED IN ACCORDANCE TO SPECIFIC SYSTEM REQUIREMENTS.
12. CONDUCTOR FOR SPECIAL SYSTEMS (DATA, TELEPHONE, SIGNAL, FIRE ALARM ETC.) SHALL MEET THE SYSTEM SPECIFICATION AND CODE REQUIREMENTS GOVERNING SYSTEM INSTALLATION REQUIREMENTS.
13. CONNECTIONS OR SPLICES LOCATED IN PULL BOXES OR OTHER SPACE BELOW GRADE SHALL BE WEATHERPROOF. #8 CONDUCTORS AND SMALLER SHALL USE SCOTCHLOK CONNECTORS IMBEDDED WITHIN A "UNIPAK" 3M SCOTCHCAST EPOXY TYPE RESIN. #6 AND LARGER SHALL USE "HI-PRESS" HYDRAULICALLY COMPRESSED HEAVY WALL CONNECTOR AS MANUFACTURED BY THOMAS & BETTS #HS-LR OR RAYCHEM #MWTM OR #WCSM SERIES PRE-APPLIED SEALANT, POLYLEFIN HEAT SHRINKABLE TUBE INSULATOR FOR EACH CONDUCTOR OR OR COLD SHRINK TUBE INSULATORS RAYCHEN #RVS.
14. BOLT TYPE SODERLESS CONNECTORS SHALL BE TIGHTEN TWICE AT 24 AND 48 HOURS AFTER THE ORIGINAL INSTALLATION AND BEFORE TAPING.

LIGHTING

1. THE LIGHTING FIXTURES ARE SPECIFIED WITH A GENERIC MOUNTING FORMAT. THE CONTRACTOR IS RESPONSIBLE TO VERIFY AND PROVIDING ALL HANGARS, CLIPS AND NECESSARY HARDWARE TO INSTALL LIGHTING FIXTURE AT THE LOCATION INDICATED ON THE ARCHITECTURAL AND ELECTRICAL DRAWINGS.
2. THE CONTRACTOR SHALL VERIFY THE LIGHTING FIXTURE VOLTAGE PRIOR TO SUBMITTING SHOP DRAWINGS.
3. PROVIDE EARTHQUAKE MOUNTING HARDWARE, AIRCRAFT CABLE SUPPORTS OR PENDANTS WITH 45 DEGREE BALL ALIGNERS FOR PENDENT LIGHT FIXTURES. VERIFY MOUNTING WITH THE PROJECT MANAGER PRIOR TO INSTALLATION.
4. EXTERIOR POLE, POST AND BOLLARD LIGHTING PRODUCTS SHALL BE MOUNTED ON CONCRETE BASES. REFER TO DETAILS AND SPECIFICATIONS FOR TYPE AND SIZES REQUIRED.
5. RECESSED LIGHT FIXTURES TO BE MOUNTED IN CEILINGS WHICH HAVE A ONE-HOUR OR MORE RATING SHALL BE ENCLOSED IN A BOX WITH A FIRE RATING EQUAL TO OR GREATER THAN THAT OF THE CEILING. PROVIDE A MINIMUM OF 3" CLEAR FROM ALL SIDES AND TOP OF THE LIGHTING FIXTURE TO THE ENCLOSURE. COORDINATE THE LOCATIONS WITH THE PROJECT MANAGER PRIOR TO INSTALLATION.
6. ALL BALLAST'S SHALL BE HIGH POWER FACTOR RATED. ALL LINEAR LAMP FLUORESCENT BALLAST'S SHALL BE ELECTRONIC TYPE AND MANUFACTURER BY MAGNETEK OR ADVANCE. HARMONIC DISTORTION SHALL NOT EXCEED TWENTY (20%) PERCENT. EXTERIOR APPLICATIONS SHALL BE LOW TEMPERATURE, ZERO DEGREE'S FAHRENHEIT BALLASTS.
7. LIGHT FIXTURES INDICATED AS EMERGENCY SHALL BE PROVIDED WITH A NINETY (90) MINUTE EMERGENCY BALLAST AND REMOTE TEST SWITCH. THE EMERGENCY BALLAST SHALL BE A BODINE #B50 SERIES OR EQUAL, FOR 2' THROUGH 8' LAMPS, AND BODINE #B84 SERIES OR EQUAL FOR COMPACT FLUORESCENT LAMPS. THE CHARGING CIRCUIT SHALL BE CONNECTED TO THE BATTERY UNIT AND SHALL REMAIN HOT AT ALL TIMES AND OVER-RIDE LOCAL SWITCHING CONTROLS IN CASE OF A POWER OUTAGE.
8. EMERGENCY LIGHTING FIXTURES INTENDED TO BE OPERATED AS NIGHT LIGHTS SHALL BE IDENTIFIED ON THE LIGHTING PLANS.
9. VERIFY THE MOUNTING LOCATIONS FOR ALL EXIT SIGNS PRIOR TO INSTALLATION WITH THE PROJECT MANAGER AND ARCHITECTURAL ELEVATIONS.
10. PROVIDE A TYPED WRITTEN LIST OF A LAMP TYPES, WATTAGE'S AND BEAM SPREADS FOR EACH FIXTURE LOCATION TO THE PROJECT MANAGER AT THE COMPLETION OF THE PROJECT.

SIGNAL AND DATA SYSTEMS

1. PROVIDE CONDUIT HOME RUNS FROM SYSTEM DEVICES TO RESPECTIVE SYSTEM BACKBOARD, TERMINAL CABINET OR EQUIPMENT RACK.
2. CONDUITS MAY BE STUBBED OUT IN ACCESSIBLE CEILING SPACES FOR DATA AND SIGNAL SYSTEMS IF PLENUM RATED CABLES ARE APPROVED FOR THE PROJECT. ACCESSIBILITY MEANS THAT CABLING HAS A DIRECT MEANS OF TRAVEL TO RESPECTIVE SYSTEM TERMINATION POINTS AND IS ACCESSIBLE FROM A T-BAR CEILING CONTINUOUSLY.
3. WHEN APPLICABLE, PROVIDE ALL CABLE SUPPORTS AND CABLE TRAYS AS REQUIRED TO PROPERLY RUNNING PLENUM RATED CABLES. SUBMIT SUPPORTS, TRAYS ETC. FOR REVIEW PRIOR TO PROCEEDING WITH WORK.
4. IF MORE THAN 1 SYSTEM WILL BE TERMINATING AT A BACKBOARD SPACE THE CONTRACTOR SHALL TERMINATE EACH SYSTEM IN ITS OWN SECTION OF THE BACKBOARD.
5. EQUIPMENT BACKBOARDS SHALL BE PROVIDED WITH A SYSTEM GROUND SIZED IN ACCORDANCE WITH THE SYSTEM AND ELECTRICAL CODE REQUIREMENTS.
6. ALL TELEPHONE AND DATA OUTLETS SHALL BE PROVIDED WITH DUPLEX DEVICES TO ACCOMMODATE A TELEPHONE AND/OR DATA DEVICE FOR EACH SYSTEM AT EACH LOCATION. DEVICES SHALL BE DESIGNED TO ACCEPT A CATEGORY 6 CABLE. DEVICES SHALL MATCH THE STYLE AND COLOR OF THE RECEPTACLES.
7. VERIFY THE MOUNTING HEIGHT OF ALL TELEPHONE OUTLETS PRIOR TO INSTALLATION AND PROVIDE COVER PLATES SUITABLE TO ACCEPT WALL MOUNTED TELEPHONES.
8. TELEVISION OUTLETS SHALL BE PROVIDED FOR TERMINATION OF A COAXIAL CABLE. TELEVISION OUTLETS SHALL BE INSTALLED WITHIN THE SAME STUD SPACE OF THE ACCOMPANYING RECEPTACLE.
9. PROVIDE A CATEGORY 6 DATA CABLE FROM EACH TELEPHONE AND DATA OUTLET LOCATION DIRECTLY TO THE COMMUNICATION BACKBOARD. SPLICES AND NOT ALLOWED.
10. PROVIDE A COAXIAL CABLE FROM EACH TELEVISION OUTLET LOCATION DIRECTLY TO THE COMMUNICATION BACKBOARD. SPLICES AND SPLITTERS ARE NOT ALLOWED.

MECHANICAL SYSTEMS:

1. VERIFY EXACT LOCATIONS AND ORIENTATION OF ALL MECHANICAL EQUIPMENT WITH MECHANICAL DRAWINGS. FIELD VERIFY CONDITIONS WITH MECHANICAL CONTRACTOR PRIOR TO ROUGH IN.
2. ELECTRICAL CONTRACTOR SHALL CHECK THE ROTATION OF ALL THREE PHASE MOTORS AND CORRECT THE ROTATION IF NECESSARY.
3. ELECTRICAL CONTRACTOR SHALL PROVIDE FUSES SIZED PER THE MANUFACTURER'S RECOMMENDATIONS.
4. STARTERS SHALL BE PROVIDED BY THE ELECTRICAL CONTRACTOR SHALL BE FULL VOLTAGE, REDUCED VOLTAGE OR COMBINATION DISCONNECT AND STARTER WITH CONTROL VOLTAGE AS REQUIRED. STARTERS SHALL INCLUDE MOTOR OVERLOAD PROTECTION, PHASE LOSS AND PHASE UNBALANCE PROTECTION AS REQUIRED.
5. ELECTRICAL CONTRACTOR TO REFER TO ALL SPECIFIC EQUIPMENT AND ARCHITECTURAL DRAWINGS FOR EXACT LOCATIONS AND CHARACTERISTICS OF ALL EQUIPMENT SHOWN ON THE DRAWINGS. ANY MODIFICATIONS AND/OR ADDITIONAL WORK NECESSARY SHALL BE INCLUDED IN THE BASE BID.
6. ALL TEMPERATURE CONTROL AND INTERLOCK CONDUIT AND WIRING SHALL BE BY THE ELECTRICAL CONTRACTOR UNLESS SPECIFICALLY NOTED OTHERWISE. REFER TO MECHANICAL / PLUMBING DRAWINGS FOR ALL INFORMATION.
7. ELECTRICAL CONTRACTOR SHALL COORDINATE THE ROUTING OF POWER WIRING TO ROOF MOUNTED EQUIPMENT WITH MECHANICAL PIPE CURB ASSEMBLY. NO SEPARATE ROOF PENETRATIONS WILL BE PERMITTED. ALL WIRING SHALL BE BELOW THE ROOF IN AN ACCESSIBLE CEILING SPACE LOCATION.
8. ALL ROOF MOUNTED EQUIPMENT SHALL BE WEATHERPROOF (NEMA 3R).

ELECTRICAL GENERAL NOTES — SCALE: NONE — 3

DUPLEX RECEPTACLE – WALL MOUNTED +18" AFF OR AS NOTED

DUPLEX GFCI RECEPTACLE – WALL MOUNTED +18" OR AS NOTED

DUPLEX RECEPTACLE – WALL MOUNTED MOUNTED ABOVE COUNTER OR AS REQUIRED

DUPLEX GFCI RECEPTACLE – WALL MOUNTED MOUNTED ABOVE COUNTER OR AS REQUIRED

QUADPLEX RECEPTACLE – WALL MOUNTED +18" AFF OR AS NOTED

QUADPLEX RECEPTACLE – WALL MOUNTED MOUNTED ABOVE COUNTER OR AS REQUIRED

DUPLEX GFCI RECEPTACLE – FLOOR MOUNTED IN APPROVED FLOOR BOX WITH FLUSH SERVICE FITTING OR AS NOTED

SPECIALLY RATED RECEPTACLE, SIZE AND NEMA CONFIGURATION AS REQUIRED OR AS NOTED ON PLANS

DUPLEX RECEPTACLE – WIRED FOR HALF HOT AND HALF SWITCHED +18" AFF OR AS NOTED

$ SINGLE POLE SWITCH – WALL MOUNTED +42" OR AS NOTED, SUBSCRIPT SYMBOLS INDICATE THE FOLLOWING:
- 3 – THREE WAY SWITCH
- 4 – FOUR WAY SWITCH
- OS – OCCUPANCY SWITCH
- D – DIMMER
- a,b,c, etc. – INDICATES THE NUMBER OF SWITCHES AND LIGHT FIXTURES CONTROLLED

JUNCTION BOX – ACCESSIBLE FOR THE APPLICATION SHOWN ON THE DRAWINGS

JUNCTION BOX – WALL MOUNTED +18" AFF OR AS NOTED

FLUSH MOUNTED PANELBOARD – REFER TO PANEL SCHEDULE AND GENERAL NOTES

SURFACE MOUNTED PANELBOARD – REFER TO PANEL SCHEDULE AND GENERAL NOTES

SURFACE MOUNTED SWITCHBOARD/DISTRIBUTION PANELBOARD – REFER TO PANEL SCHEDULE AND GENERAL NOTES

SURFACE MOUNTED COMMUNICATIONS BACKBOARD – AC GRADE OR BETTER, VOID-FREE, 4'x8' SHEETS OF 3/4" PLYWOOD. PLYWOOD SHEETS SHALL BE MOUNTED VERTICALLY FROM CEILING HEIGHT TOWARDS FLOOR. PLYWOOD MUST BE PAINTED ON ALL SIDES WITH ONE COAT OF PRIMER AND TWO COATS OF WHITE FIRE RESISTANT PAINT. THE PLYWOOD SHOULD BE INSTALLED WITH THE GRADE 'C' SURFACE FACING THE WALL

DRY TYPE TRANSFORMER – REFER TO SINGLE LINE DIAGRAM, ELECTRICAL PLANS AND GENERAL NOTES

SYSTEM GROUND IN ACCORDANCE WITH ELECTRICAL CODE ARTICLE #250

'A'-2,4,6 — CIRCUIT HOME RUN TO PANEL "A" CIRCUITS 2,4,6 – HASH MARKS INDICATE NUMBER OF CONDUCTORS. NO HASH MARKS INDICATE ONE PHASE CONDUCTOR AND ONE NEUTRAL CONDUCTOR. PROVIDE CODE SIZED COPPER BOND CONDUCTOR AS REQUIRED AND REFER TO THE GENERAL NOTES FOR ADDITIONAL REQUIREMENTS.

CONDUIT CONCEALED WITHIN BUILDING WALLS OR CEILING SPACE. HASH MARKS INDICATE QUANTITY OF CONDUCTORS. NO HASH MARKS INDICATE ONE PHASE CONDUCTOR AND ONE NEUTRAL CONDUCTOR. PROVIDE CODE SIZED COPPER BOND CONDUCTOR AS REQUIRED AND REFER TO THE GENERAL NOTES FOR ADDITIONAL REQUIREMENTS.

CONDUIT CONCEALED BELOW GRADE OR IN CONCRETE SLAB. HASH MARKS INDICATE QUANTITY OF CONDUCTORS. NO HASH MARKS INDICATE ONE PHASE CONDUCTOR AND ONE NEUTRAL CONDUCTOR. PROVIDE CODE SIZED COPPER BOND CONDUCTOR AS REQUIRED AND REFER TO THE GENERAL NOTES FOR ADDITIONAL REQUIREMENTS.

DISCONNECT SWITCH – FUSED AND H.P. RATED PER MANUFACTURERS REQUIREMENTS OF EQUIPMENT BEING SERVED.

LIGHT FIXTURE CALL OUT – NUMBER INDICATES THE QUANTITY OF LIGHTS, REFER TO THE LIGHT FIXTURE SCHEDULE FOR FIXTURE SPECIFICATION.

PREWIRED FLEXIBLE STEEL CONDUIT FOR FINAL CONNECTION TO DEVICE, LIMITED TO 72" IN LENGTH.

EXHAUST FAN – PROVIDED BY THE MECHANICAL CONTRACTOR, WIRED BY THE ELECTRICAL CONTRACTOR, REFER TO THE MECHANICAL DRAWINGS FOR SPECIFICATION.

UTILITY COMPANY METER, PROVIDE METER SOCKET AND CURRENT TRANSFORMERS PER UTILITY COMPANY REQUIREMENTS.

DRY TYPE TRANSFORMER – REFER TO SINGLE LINE DIAGRAM AND GENERAL NOTES FOR SPECIFICATIONS.

SYSTEM GROUND IN ACCORDANCE WITH ELECTRICAL CODE ARTICLE #250

CIRCUIT BREAKER, SIZE AS NOTED

BUS BAR

LANDING LUGS

UNDERGROUND UTILITY COMPANY PULL SECTION

GFP — GROUND FAULT PROTECTION DEVICE

RECESSED FLOOR BOX-PER FLOOR TYPE WITH FOURPLEX AND COMBINATION TELEPHONE AND DATA OUTLET.

COMBINATION TELEPHONE AND DATA OUTLET-WALL MOUNTED +18"AFF OR AS NOTED.

C — CAPTIVE CARD KEY CONTROL SWITCH WALL MOUNTED +42" OR AS NOTED.

TV — TELEVISION OUTLET BOX – WALL MOUNTED +18" OR AS NOTED. PROVIDE A 3/4" CONDUIT WITH COAXIAL CABLE TO THE COMMUNICATION BACKBOARD UNLESS OTHERWISE NOTED

ELECTRICAL LEGEND — SCALE: NONE — 2

E1.0 – ELECTRICAL GENERAL NOTES & LEGEND
E1.1 – ELECTRICAL DETAILS
E1.2 – ELECTRICAL SINGLE LINE DIAGRAM
E2.0 – ELECTRICAL SITE PLAN
E3.0 – ELECTRICAL BASEMENT PLAN
E4.0 – ELECTRICAL PLANS

SHEET INDEX — SCALE: NONE — 1

M|R|C ENGINEERING, INC.
Project Number: 15077.00
Professional Engineers & Lighting Consultants
o: 760-340-9005 f: 760-340-9100
PALM DESERT | SANTA ANA | SAN DIEGO

REGISTERED PROFESSIONAL ENGINEER RANDALL V. MOSS No. E13453 Exp. 09/30/18 ELECTRICAL STATE OF CALIFORNIA

Narkweather ARCHITECTS INC.
73 330 HWY 111, SUITE A / PALM DESERT, CA 92260-4016
PHONE: (760) 346-4090 / E-MAIL: info@narkweather.net

OWNERSHIP OF DOCUMENTS
DRAWINGS AND SPECIFICATIONS AS INSTRUMENTS OF SERVICE ARE AND SHALL REMAIN THE PROPERTY OF THE DESIGNER WHETHER THE PROJECT FOR WHICH THEY WERE PREPARED IS EXECUTED OR NOT. THEY ARE NOT TO BE USED ON OTHER PROJECTS OR EXTENSIONS TO THIS PROJECT EXCEPT BY AGREEMENT IN WRITING AND WITH APPROPRIATE COMPENSATION TO Narkweather Architects Inc.
COPYRIGHT 2016 Narkweather Architects

CITY OF RANCHO MIRAGE

PROJECT DESCRIPTION: O B S E R V A T O R Y — Rancho Mirage Public Library

SITE ADDRESS: 71-100 California 111, Rancho Mirage, CA 92270

SHEET CONTENT: ELECTRICAL GENERAL NOTES & LEGEND

DRAWING SCALE: NONE

ISSUE DATE		
MONTH	DAY	YEAR
SEPT.	29	2016

1 REVISION DATE:
2 REVISION DATE:
3 REVISION DATE:
REVISION DATE:
REVISION DATE:

(PLAN CHECK ENGINEER STAMP)
RECOMMENDED FOR APPROVAL BY: LELAND E. COLE 9/27/16 DATE
R.C.E. 47159 EXP. 12/31/17
APPROVED BY CITY OF RANCHO MIRAGE:
WILLIAM A. ENOS, CITY ENGINEER R.C.E. 43910, EXP. 6/30/2017 DATE

DRAWING NUMBER
E1.0
SHEET # 50 OF 56
PRIVATE REFERENCE #
CITY REFERENCE #

Bid Set - 10/07/2016

ELECTRICAL PANEL SCHEDULES (8) — SCALE: NTS

PANEL: OB — LOCATION: COSMIC OFFICE — MOUNTING: RECESSED
PANELVOLTAGE: 120/208 3P, 4W — BUS: 125 AMP — MAIN: 125 A, 3P — AIC RATING: 10,000
CIRCUIT CODE: N: NON-CONTINUOUS; L: LONG-CONTINUOUS; R: DEMANDABLE RECEPTACLES; K: KITCHEN

CIRC	VA LOAD A	VA LOAD B	VA LOAD C	LOAD DESCRIPTION	CODE	TYPE M	TYPE R	TYPE L	C.B. TR	C.B. P	BUS ABC	C.B. TR	C.B. P	TYPE L	TYPE R	TYPE M	CODE	LOAD DESCRIPTION	VA LOAD A	VA LOAD B	VA LOAD C	CIRC
1	525			LIGHTING - EXTERIOR	L				20	1	X	30	2				L	AC-1 CONDENSING UNIT	2328			2
3		850		LIGHTING - INTERIOR RED	L				20	1	X	-	-				L	-		2328		4
5			850	LIGHTING - INTERIOR WHITE	L				20	1	X	30	2				L	AC-2			1572	6
7	900			RECEPTS. - BASEMENT	N				20	1	X	-	-				N	-	1572			8
9		720		RECEPTS. - BASEMENT	N				20	1	X	15	2				N	AC-3		1286		10
11			540	RECEPTS. - OBSERVATORY	N				20	1	X	-	-				N	-			1286	12
13	540			RECEPTS. - OBSERVATORY	N				20	1	X	15	2				N	AC-1 FAN COIL	648			14
15		540		RECEPTS. - OBSERVATORY	N				20	1	X	-	-				N	-		648		16
17			720	RECEPTS. - COSMIC OFFICE	N				20	1	X	20	2				N	EF-1			1320	18
19	720			RECEPTS. - COSMIC OFFICE	N				20	1	X	-	-				N	-	1320			20
21		720		RECEPTS. - COSMIC OFFICE	N				20	1	X	20	1				N	RECEPTS. - HANDRAIL PUMP		900		22
23			540	RECEPTS. - COSMIC OFFICE	N				20	1	X	20	1				N	RECEPTS. - HANDRAIL PUMP			900	24
25	360			RECEPTS. - CONTROL AREA	N				20	1	X	20	1				N	RECEPTS. - EDF	900			26
27		360		RECEPTS. - CONTROL AREA	N				20	1	X	20	1				N	LIGHTING CONTROL PANEL		200		28
29			1200	RECEPTS. - TELESCOPE CONTROLX	N				20	1	X	20	2				N	DOME - AZIMUTH MOTORS			960	30
31	720			RECEPTS. - EXTERIOR DISPLAY	N				20	1	X	-	-				N	-	960			32
33		720		RECEPTS. - EXTERIOR DISPLAY	N				20	1	X	25	2				N	DOME - SHUTTER MOTORS		1704		34
NOTE 2 35			720	RECEPTS. - EXTERIOR DISPLAY	N				20	1	X	-	-				N	-			1704	36 NOTE 1
37	720			RECEPTS. - STORAGE/R.R.	N				20	1	X							SPACE				38
39		480		DUCT DAMPER	N				20	1	X							SPACE				40
41				SPACE							X							SPACE				42
	4485	4390	4570	PHASE TOTALS														PHASE TOTALS	7728	7066	7742	

Total Phase A:	12213
Total Phase B:	11456
Total Phase C:	12312

CONNECTED VA (CODE N):	27528
CONNECTED VA (CODE L):	8453
CONNECTED VA (CODE R):	
CONNECTED VA (CODE K):	
TOTAL CONNECTED KVA:	36.0
DEMAND KVA:	
TOTAL ADJUSTED KVA:	36.0
TOTAL PANEL AMPS:	100.1
AMPS W/LCL:	106.8

NOTES:
1. PROVIDE GFP TYPE CIRCUIT BREAKER.
2. PROVIDE GFCI TYPE CIRCUIT BREAKER.

PANEL: (EXIST.) EVPW — LOCATION: ON PLANS — MOUNTING: SURFACE
PANELVOLTAGE: 120/208 3P, 4W — BUS: 225 AMP — MAIN: 225 A, 3P — AIC RATING: 10,000
CIRCUIT CODE: N: NON-CONTINUOUS; L: LONG-CONTINUOUS; R: DEMANDABLE RECEPTACLES; K: KITCHEN

CIRC	VA LOAD A	VA LOAD B	VA LOAD C	LOAD DESCRIPTION	CODE	TYPE M	TYPE R	TYPE L	C.B. TR	C.B. P	BUS ABC	C.B. TR	C.B. P	TYPE L	TYPE R	TYPE M	CODE	LOAD DESCRIPTION	VA LOAD A	VA LOAD B	VA LOAD C	CIRC
1	12213			SUBFEED PANEL 'OB'	N				125	3								SPACE				2
3		10976		-	N				-	-								SPACE				4
5			12312	-	N				-	-								SPACE				6
7				SPACE														SPACE				8
9				SPACE														SPACE				10
11				SPACE														SPACE				12
13				SPACE								20	1				L	SHADE STRUCTURE LTS	1400			14
15		400		LCP	N				20	1		20	1				L	SHADE STRUCTURE LTS		1400		16
17			3800	EV CHARGER 3	N				50	2		50	2				N	EV CHARGER 5			3800	18
19	3800			-	N				-	-		-	-				N	-	3800			20
21		3800		EV CHARGER 4	N				50	2		50	2				N	EV CHARGER 6		3800		22
23			3800	-	N				-	-		-	-				N	-			3800	24
	16013	15176	19912	PHASE TOTALS														PHASE TOTALS	5200	5200	7600	

Total Phase A:	21213
Total Phase B:	20376
Total Phase C:	27512

CONNECTED VA (CODE N):	66301
CONNECTED VA (CODE L):	2800
CONNECTED VA (CODE R):	
CONNECTED VA (CODE K):	
TOTAL CONNECTED KVA:	69.2
DEMAND KVA:	
TOTAL ADJUSTED KVA:	69.2
TOTAL PANEL AMPS:	192.4
AMPS W/LCL:	195.4

NOTES:

STUD WALL FIRE STOP - CONDUIT (6) — SCALE: NTS

UL/cUL SYSTEM NO. W-L-1297
F-RATINGS = 1-HR. OR 2-HR.
T-RATING = 0-HR
L-RATING AT AMBIENT = LESS THAN 1 CFM/SQ FT.
L-RATING AT 400° F = LESS THAN 1 CFM/SQ FT.

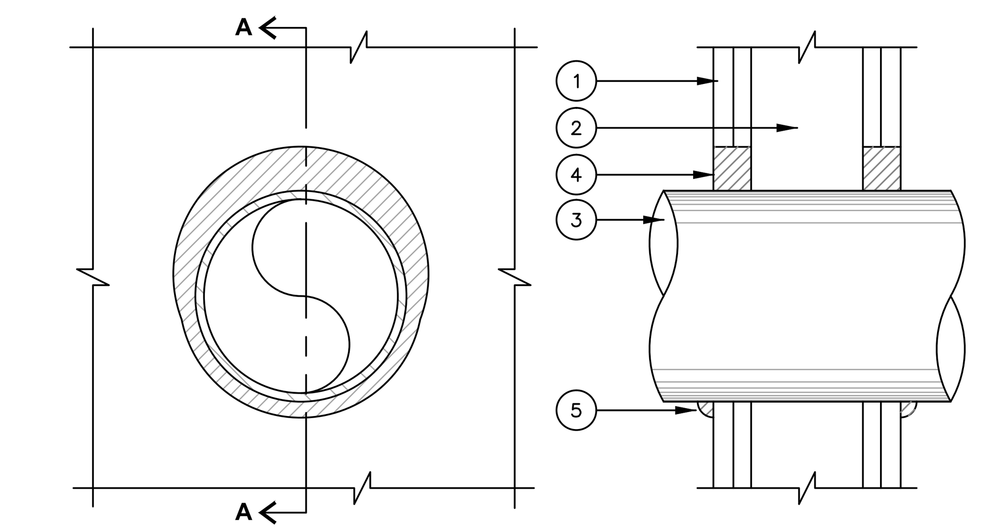

1. GYPSUM WALL ASSEMBLY (UL/cUL CLASSIFIED U300, U400, OR V400 SERIES) (1-HR. OR 2 HR. FIRE-RATING) (2-HR. SHOWN).
2. (NOT SHOWN). WOOD STUDS TO CONSIST OF NOMINAL 2"X4" LUMBER. STEEL STUDS TO BE MINIMUM 2-1/2" WIDE.
3. PENETRATING ITEM TO BE ONE OF THE FOLLOWING:
   a. MAXIMUM 30" NOMINAL DIAMETER STEEL PIPE (SCHEDULE 10 OR HEAVIER).
   b. MAXIMUM 30" NOMINAL DIAMETER CAST IRON OR DUCTILE IRON PIPE.
   c. MAXIMUM 6" NOMINAL DIAMETER COPPER PIPE OR TUBING.
   d. MAXIMUM 6" NOMINAL DIAMETER STEEL CONDUIT.
   e. MAXIMUM 4" NOMINAL DIAMETER EMT.
4. HILTI CP 606 FLEXIBLE FIRESTOP SEALANT:
   a. MINIMUM 5/8" DEPTH OF SEALANT FOR A 1-HR. FIRE-RATING.
   b. MINIMUM 1-1/4" DEPTH OF SEALANT FOR A 2-HR. FIRE-RATING.
5. MINIMUM 1/2" BEAD HILTI CP 606 FLEXIBLE FIRESTOP SEALANT APPLIED AT POINT OF CONTACT.

NOTES:
1. MAXIMUM DIAMETER OF OPENING = 32"
2. ANNULAR SPACE IN 1-HR. WALLS = MINIMUM 0", MAXIMUM 1".
3. ANNULAR SPACE IN 2-HR. WALLS = MINIMUM 0", MAXIMUM 2".
4. PENETRANT MAY BE INSTALLED AT AN ANGLE NOT GREATER THAN 45° FROM PERPENDICULAR.

PENETRATION DETAIL @ EXISTING COMM. BOARD (3) — SCALE: NONE

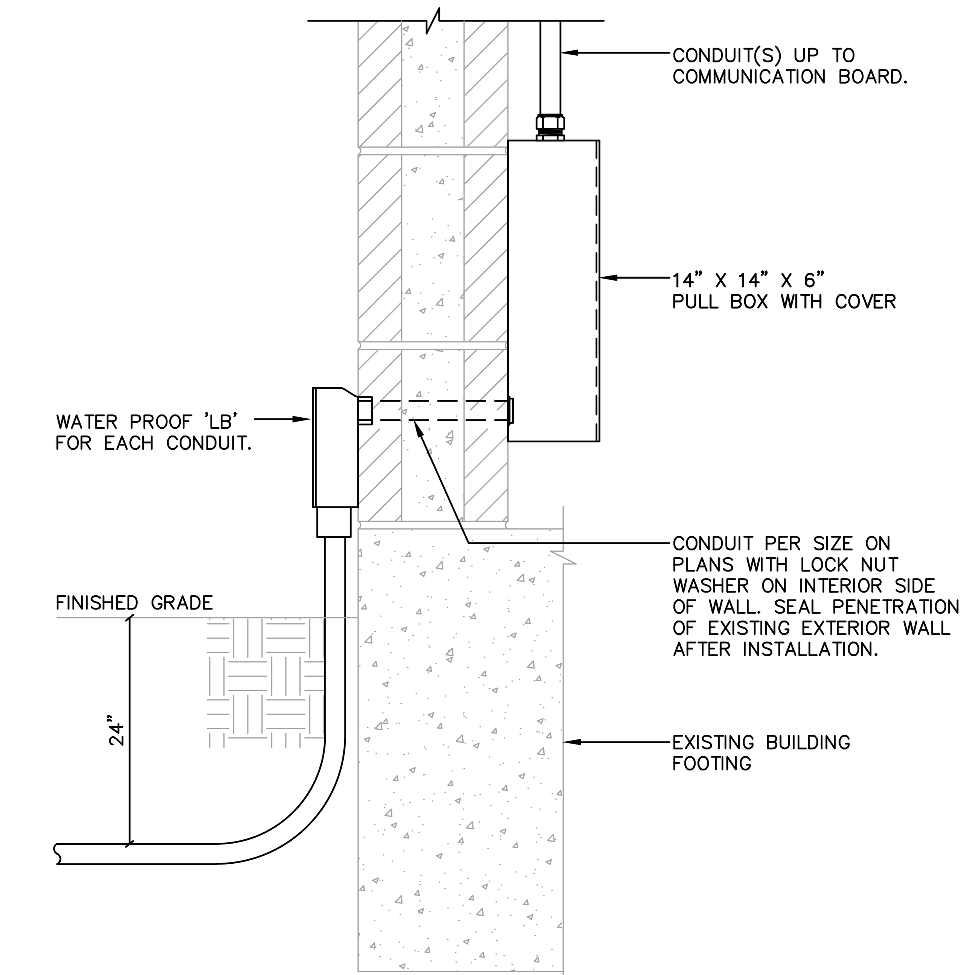

PANELBOARD MOUNTING DETAIL (5) — SCALE: NTS

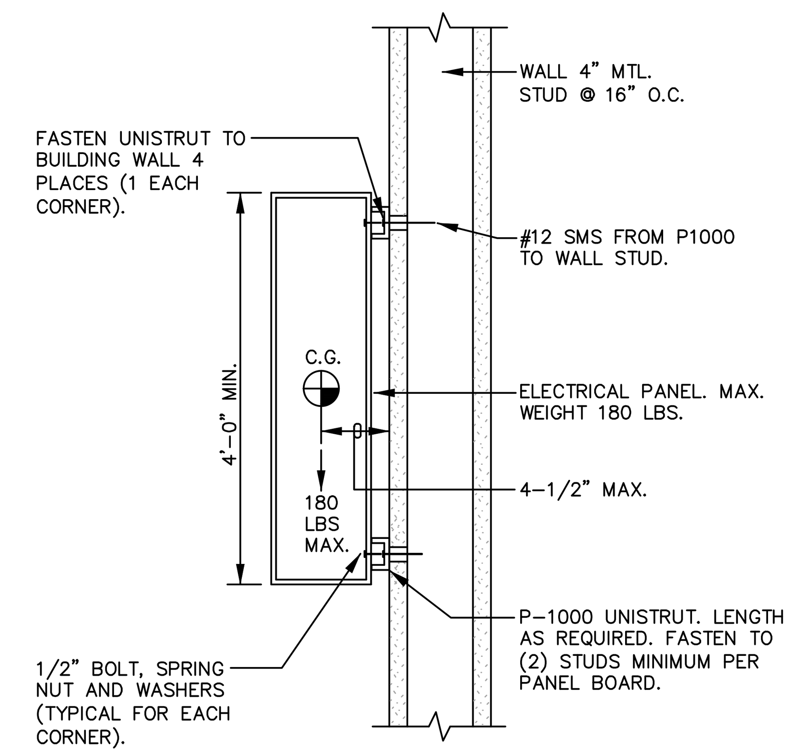

GROUND BUS & SYSTEM DETAIL (2) — SCALE: NTS

✳ GROUNDING ELECTRODE CONDUCTOR (GEC) SHALL BE SIZED AS FOLLOWS:

EQUIPMENT:	GEC SIZE:
'OB '	1#1/0-3/4"C

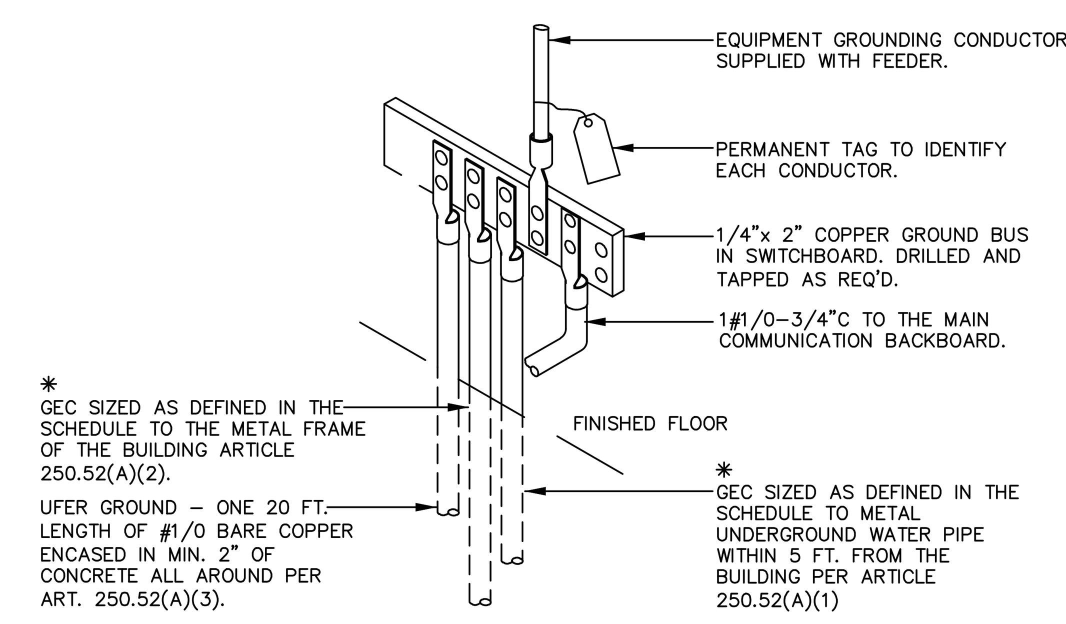

NOTE: NEUTRAL BUS SHALL BE ISOLATED FROM EQUIPMENT GROUND BUS.

LIGHTING CONTROL PANEL (7) — SCALE: NTS

NOTES:

1. PROVIDE AND INSTALL A COMPLETE LIGHTING CONTROL SYSTEM IN FULL COMPLIANCE WITH THE 2013 CALIFORNIA ENERGY CODE - TITLE 24.
2. TYPICAL WIRING DIAGRAM INDICATED, ACTUAL DEVICE TYPES AND QUANTITIES SHALL BE AS NOTED AND/OR SPECIFIED IN DRAWINGS.
3. ALL CLASS 2 LOW VOLTAGE AND NETWORK WIRING SHALL BE RUN SEPARATE FROM LINE VOLTAGE WIRING AND IN ITS OWN CONDUIT.
4. INTERFACE OF THE LEVITON RELAY/DIMMING PANEL WITH EQUIPMENT, LIGHT FIXTURES, ETC. BY OTHERS IS THE SOLE RESPONSIBILITY OF THE ELECTRICAL CONTRACTOR. LAMP, BALLAST, DRIVER COMPATIBILITY MUST BE VERIFIED BY THEIR RESPECTIVE MANUFACTURERS.
5. CABLE RUNS ARE CONTINUOUS BETWEEN CONNECTED DEVICES, NO SPLICING ALLOWED.
6. LUMA-CAN 'LC' CABLE:
   6.a. TOTAL NETWORK CABLE RUNS NOT TO EXCEED 1600 FEET.
   6.b. SEQUENTIAL CONNECTION ONLY. NO BRANCHING ALLOWED UNLESS A NETWORK SWITCH IS USED.
   6.c. IF DEVICES ARE NOT CONNECTED AS SHOWN, TOTAL NETWORK CABLE LENGTH MAY BE REDUCED BY DEVICE POWER REQUIREMENTS AND A NEW POWER CALCULATION WILL BE NECESSARY.
   6.d. DEVICES MAY APPEAR ON THE NETWORK IN ANY ORDER. SAMPLE DEVICE ORDER SHOWN.
7. LUMA-NET CONNECTION TOPOLOGY IS MULTI-DROP BUS WITH A 0" MAXIMUM DROP LENGTH (NO DROPS PERMITTED). LUMA-NET DEVICE ADDRESS MAY NOT EXCEED 128 ON A SINGLE LUMA-NET UNIVERSE.
8. LUMA-NET CONNECTION TOPOLOGY IS DAISY CHAIN. LUMA-CAN DEVICE ADDRESSES MAY NOT EXCEED 110 ON A SINGLE LUMA-CAN UNIVERSE.
9. ANALOG CONTROL CABLE WIRE RUNS FROM END TO END NOT TO EXCEED 1000 FEET.
10. GREEN-MAX ANALOG INPUT NOTES:
   10.a. LOW VOLTAGE (ANALOG) STATION BUTTONS THAT TERMINATE AT THE SAME ANALOG INPUT MAY BE DAISY CHAINED TOGETHER.
   10.b. OCCUPANCY SENSORS THAT TERMINATE AT THE SAME ANALOG INPUT MAY BE DAISY CHAINED TOGETHER.
   10.c. OCCUPANCY SENSORS, PHOTOCELLS AND SWITCHES MAY NOT BE COMBINED ON A SINGLE INPUT.
   10.d. EACH PHOTOCELL MUST USE A DISCRETE ANALOG INPUT.
   10.e. REFER TO LUMA-CAN NOTE WHEN USING GREEN-MAX DIGITAL STATIONS.
11. FUNCTION AND PROGRAMMING OF SYSTEM SHALL BE SET TO OPERATE LIGHT FIXTURES:
   11.a. MANUAL ON.
   11.b. AUTOMATIC LOWER BY 50% BASED ON OCCUPANCY.
   11.c. MANUAL DIMMING.
   11.d. AUTOMATICALLY ADJUST TO ELECTRIC LIGHT LEVELS BASED ON THE AMOUNT OF DAYLIGHT IN THE SPACE.
   11.e. AUTOMATIC OFF PER ASTRONOMICAL TIME CONTROL.
   11.f. 2-BUTTON STATIONS SHALL PROVIDE AFTER HOUR OVERRIDE FUNCTION FOR A MAXIMUM OF 2-HOURS.
12. SYSTEM DESIGN BASED ON THE LEVITON GREENMAX SYSTEM, AN 'OR EQUAL' SYSTEM IS ACCEPTABLE.

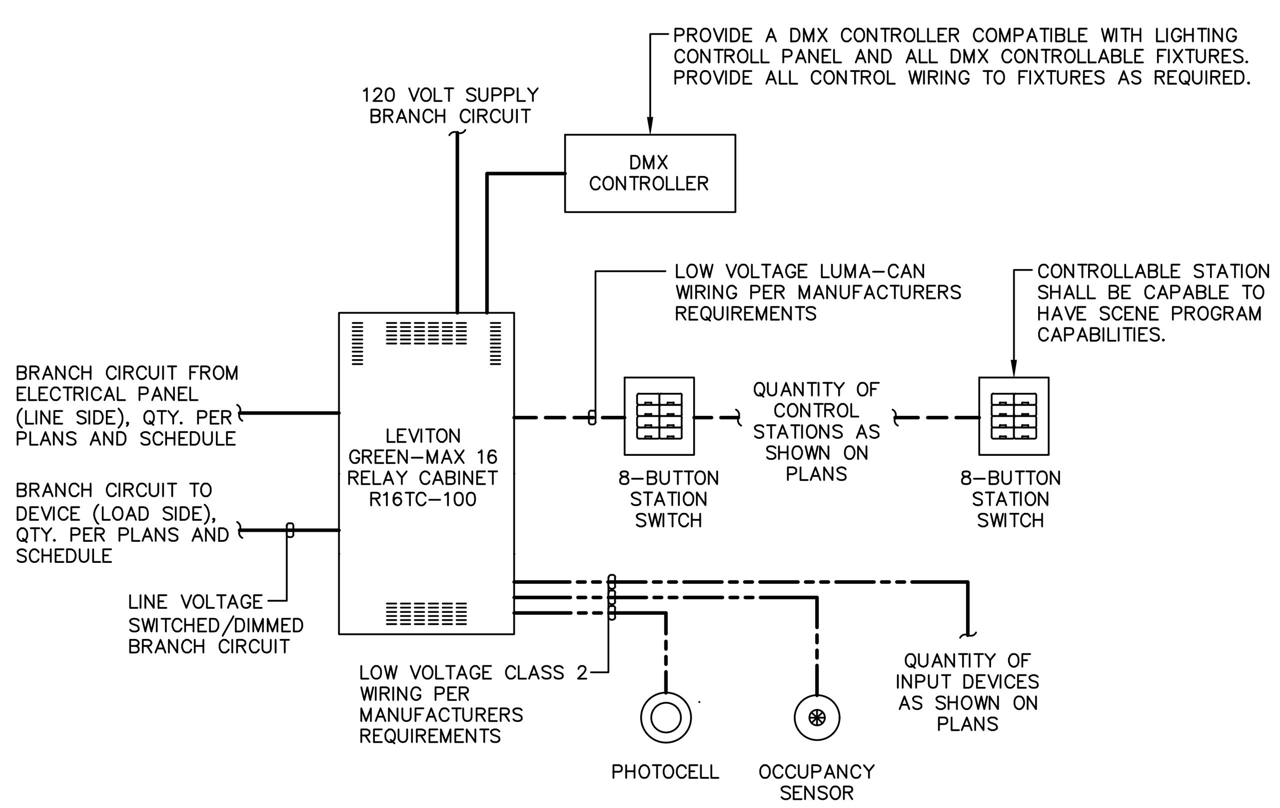

WOOD FLOOR FIRE STOP - CONDUIT (4) — SCALE: NTS

UL/cUL SYSTEM NO. F-C-1106
F-RATING = 1-HR.
T-RATING = 1/4-HR.

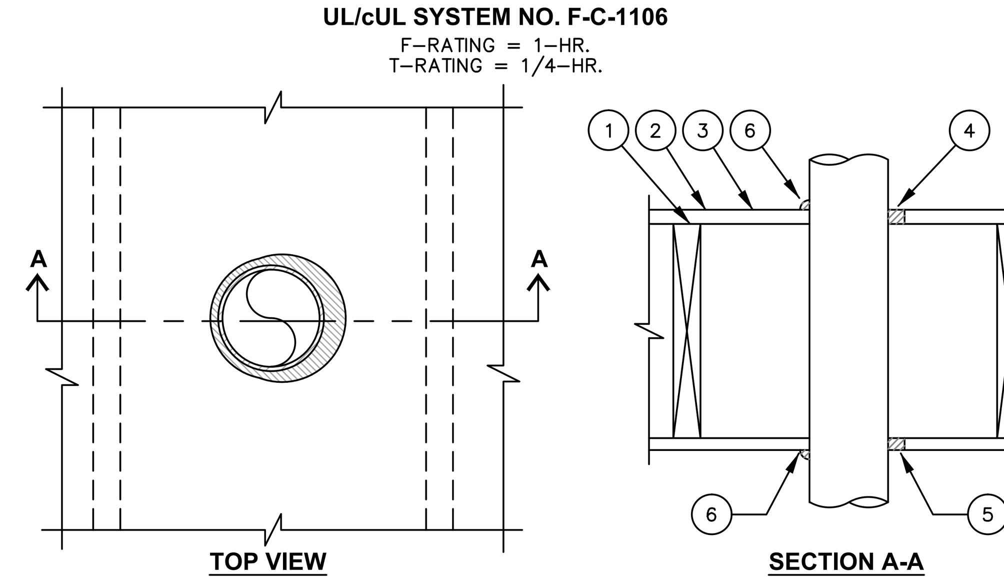

1. WOOD FLOOR/CEILING ASSEMBLY (UL/cUL CLASSIFIED L500 SERIES) (1-HR. FIRE-RATING).
2. LUMBER OR PLYWOOD SUBFLOOR WITH FINISH FLOOR OF LUMBER, PLYWOOD, OR FLOOR TOPPING MIXTURE.
3. PENETRATING ITEM TO BE ONE OF THE FOLLOWING:
   a. MAXIMUM 4" NOMINAL DIAMETER STEEL PIPE (SCHEDULE 10 OR HEAVIER).
   b. MAXIMUM 4" NOMINAL DIAMETER CAST IRON OR DUCTILE IRON PIPE.
   c. MAXIMUM 4" NOMINAL DIAMETER COPPER PIPE OR COPPER TUBING.
   d. MAXIMUM 4" NOMINAL DIAMETER STEEL CONDUIT.
   e. MAXIMUM 4" NOMINAL DIAMETER EMT.
4. MINIMUM 3/4" DEPTH HILTI CP 606 FLEXIBLE FIRESTOP SEALANT OR HILTI FS-ONE INTUMESCENT FIRESTOP SEALANT.
5. MINIMUM 5/8" DEPTH HILTI CP 606 FLEXIBLE FIRESTOP SEALANT OR HILTI FS-ONE INTUMESCENT FIRESTOP SEALANT.
5. MINIMUM 1/2" BEAD HILTI CP 606 FLEXIBLE FIRESTOP SEALANT OR HILTI FS-ONE INTUMESCENT FIRESTOP SEALANT AT PINT OF CONTACT.

NOTES:
1. MAXIMUM DIAMETER OF OPENING = 5"
2. ANNULAR SPACE = MINIMUM 0", MAXIMUM 7/8".
3. CHASE WALL (NOT SHOWN, OPTIONAL) - THE THROUGH PENETRANT MAY ROUTED THROUGH A 1-HR. FIRE-RATED GYPSUM CHASE WALL.

ABBREVIATIONS (1) — SCALE: NONE

ADA - AMERICAN WITH DISABILITIES ACT
AFF - ABOVE FINISH FLOOR OR GRADE
AWG - AMERICAN WIRE GAUGE
AMP, A - AMPERES
AIC - INTERRUPTING CAPACITY (SYMMETRICAL)
CIRC, CKT - CIRCUIT
CB - CIRCUIT BREAKER
CO - CONDUIT CONDUIT ONLY
CEC - CALIFORNIA ELECTRICAL CODE
CSFM - CALIFORNIA STATE FIRE MARSHALL
CU -COPPER
CT - CURRENT TRANSFORMER
DIA - DIAMETER
DWG - DRAWING
EC - ELECTRICAL CONTRACTOR
EM - EMERGENCY
EMT - ELECTRICAL METALLIC TUBING
EF - EXHAUST FAN
EG - EQUIPMENT GROUND (GREEN)
E - EXISTING
F - FUSED
FT - FEET
FA - FIRE ALARM
FLA - FULL LOAD AMPS
FF - FINISHED FLOOR
GFCI - GROUND FAULT CIRCUIT INTERRUPTER
GRN - GROUND
HOA - HAND/OFF/AUTO
HVAC - HEATING, VENTILATING AND AIR CONDITIONING
HP - HORSEPOWER
INC - INCANDESCENT
JB -JUNCTION BOX
K - KELVIN
KVA - KILOVOLT AMPERES
KW - KILOWATT
KV - KILOVOLTS
LCL - LONG CONTINUOUS LOAD
LTG - LIGHT, LIGHTS, LIGHTING
MCB - MAIN CIRCUIT BREAKER
MIN - MINIMUM
MLO - MAIN LUGS ONLY
MCM, KCMIL - THOUSAND CIRCULAR MILS
MFGR - MANUFACTURER
MTD, MTG - MOUNTED, MOUNTING
NEC - NATIONAL ELECTRICAL CODE
NTS - NOT TO SCALE
NIC - NOT IN CONTRACT
NL - NIGHT LIGHT
OFCI - OWNER FURNISHED, CONTRACTOR INSTALLED
P - POLE
PB - PULL BOX
PC - PHOTOCELL
PH - PHASE
PVC - POLYVINYL CHLORIDE CONDUIT
PWR - POWER
PNL - PANEL
PR - PATIENT ROOM
REC, RECEPT - RECEPTACLE
SHT - SHEET
SQ - SQUARE
SW - SWITCH
TYP - TYPICAL
UON - UNLESS OTHERWISE NOTED
UGPS - UNDERGROUND PULL SECTION
V - VOLTS
VA - VOLT AMPERES
WP - WEATHERPROOF
W - WIRE
XFMR - TRANSFORMER

MRC ENGINEERING, INC.
Project Number: 15077.00
Professional Engineers & Lighting Consultants
o: 760-340-9005 f: 760-340-9100
PALM DESERT | SANTA ANA | SAN DIEGO

REGISTERED PROFESSIONAL ENGINEER RANDALL V. MOSS No. E13453 Exp. 09/30/18 ELECTRICAL STATE OF CALIFORNIA

Narkweather ARCHITECTS INC.
73 330 HWY 111, SUITE A / PALM DESERT, CA 92260-4016
PHONE: (760) 346-4090 / E-MAIL: info@narkweather.net

OWNERSHIP OF DOCUMENTS
DRAWINGS AND SPECIFICATIONS AS INSTRUMENTS OF SERVICE ARE AND SHALL REMAIN THE PROPERTY OF THE DESIGNER WHETHER THE PROJECT FOR WHICH THEY WERE PREPARED IS EXECUTED OR NOT. THEY ARE NOT TO BE USED ON OTHER PROJECTS OR EXTENSIONS TO THIS PROJECT EXCEPT BY AGREEMENT IN WRITING AND WITH APPROPRIATE COMPENSATION TO Narkweather Architects Inc.
COPYRIGHT 2016 Narkweather Architects

CITY OF RANCHO MIRAGE
PROJECT DESCRIPTION: OBSERVATORY Rancho Mirage Public Library
SITE ADDRESS: 71-100 California 111, Rancho Mirage, CA 92270

SHEET CONTENT: ELECTRICAL DETAILS
DRAWING SCALE: NONE

ISSUE DATE		
MONTH	DAY	YEAR
SEPT.	29	2016

REVISION 1 DATE:
REVISION 2 DATE:
REVISION 3 DATE:
REVISION DATE:
REVISION DATE:

(PLAN CHECK ENGINEER STAMP)
RECOMMENDED FOR APPROVAL BY: LELAND E. COLE 9/27/16 DATE
R.C.E. 47159 EXP. 12/31/17
APPROVED BY CITY OF RANCHO MIRAGE:
WILLIAM A. ENOS, CITY ENGINEER R.C.E. 43910, EXP. 6/30/2017 DATE

DRAWING NUMBER
E1.1
SHEET # 51 OF 56
PRIVATE REFERENCE #
CITY REFERENCE #

Bid Set - 10/07/2016

1. THE CONTRACTOR SHALL BE RESPONSIBLE FOR ALL SAWCUTTING, TRENCHING, BACKFILLING, COMPACTION AND PATCHING OF CONCRETE AND/OR ASPHALT AS REQUIRED TO PERFORM HIS WORK.
2. PROVIDE COMPACTION IN ALL TRENCHES THAT MEETS THE REQUIREMENTS OF THE CALIFORNIA ELECTRICAL CODE.
3. ALL CONDUITS SHALL BE PLACED IN TRENCHES IN A MANNER THAT MEETS THE INTENT OF THE CALIFORNIA ELECTRICAL CODE.
4. ALL NEW TRENCHES SHALL BE COVERED WITH A CONCRETE WALK OR FLOORING TO MATCH THE ADJACENT AREA.
5. PROVIDE ENGRAVED NAMEPLATES ON ALL SWITCHBOARDS AND PANELBOARDS. NAMEPLATES SHALL BE 3 PLY WITH BLACK FACE AND WHITE CORE PERMANENTLY ATTACHED WITH STAINLESS STEEL LOCKING SCREWS. LETTERS SHALL BE 1/4" HIGH.
6. PROVIDE WARNING TAPE ON ALL UNDERGROUND CONDUITS OUTSIDE OF THE BUILDING.
7. INSTALL ALL CONDUITS A MINIMUM OF 12" FROM ALL OTHER UTILITIES.
8. THE MINIMUM CONDUIT SIZE FOR UNDERGROUND SYSTEMS SHALL BE 1".
9. CUTTING THROUGH OR PENETRATING GRADE BEAMS IS NOT APPROVED WITHOUT PRIOR APPROVAL.
10. CONTRACTOR SHALL FIRE STOP ALL CEILING AND WALL PENETRATIONS.
11. CONTRACTOR SHALL PROVIDE BLANK COVER PLATES FOR HOLES CREATED FROM THE REMOVAL OF THE EXISTING METER AND CT ASSEMBLY IN THE MAIN SWITCHBOARD AS WELL AS FROM ANY CONDUIT, PIPING AND/OR OTHER EQUIPMENT.

GENERAL NOTES

SCALE: NTS | 2

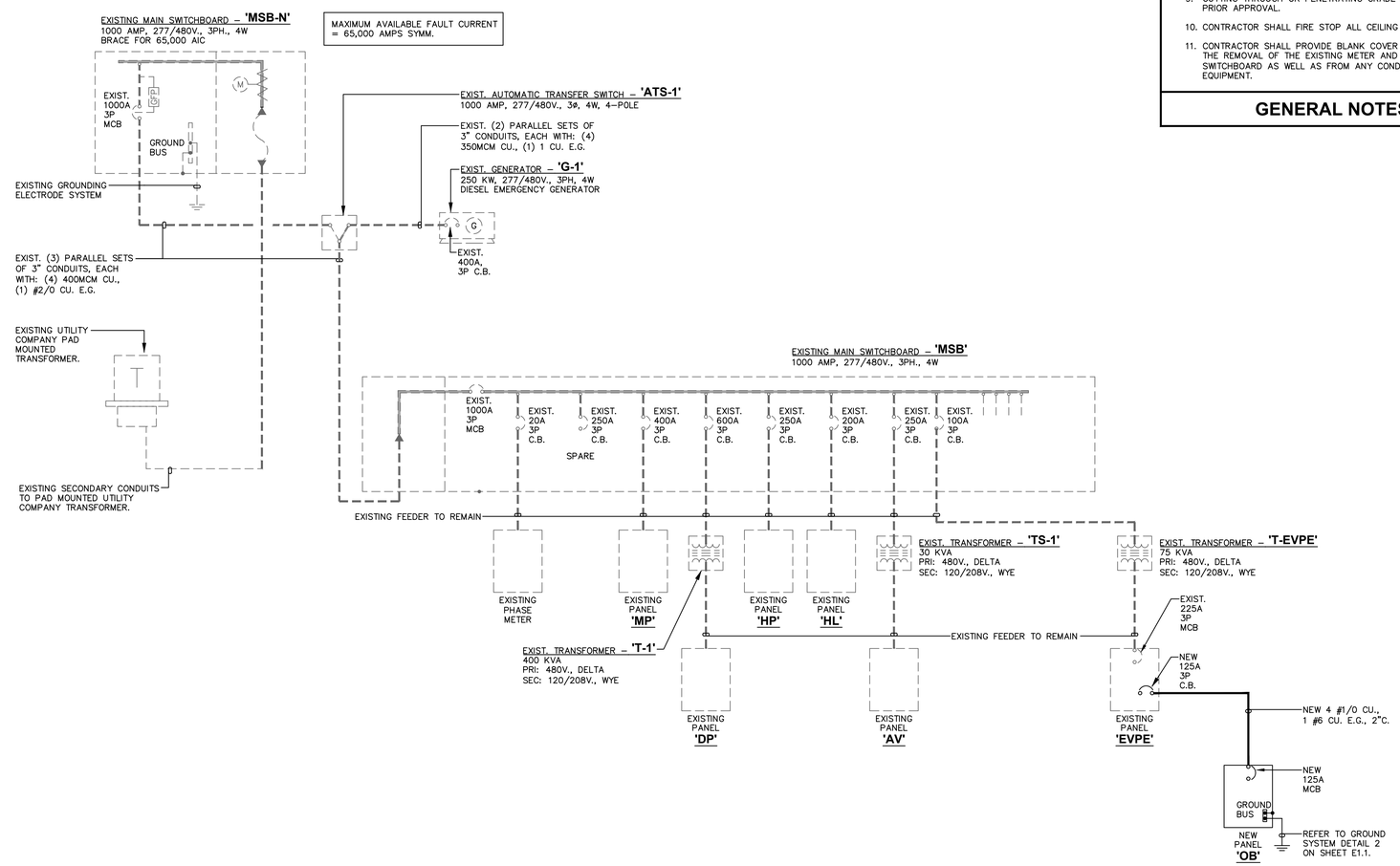

SINGLE LINE DIAGRAM

SCALE: NTS | 3

MRC ENGINEERING, INC.
Professional Engineers & Lighting Consultants
o: 760-340-9005 f: 760-340-9100
PALM DESERT | SANTA ANA | SAN DIEGO

Project Number: 15077.00

REGISTERED PROFESSIONAL ENGINEER RANDALL V. MOSS No. E13453 Exp. 09/30/18 ELECTRICAL STATE OF CALIFORNIA

Narkweather ARCHITECTS INC.
73 330 HWY 111, SUITE A / PALM DESERT, CA 92260-4016
PHONE: (760) 346-4090 / E-MAIL: info@narkweather.net

OWNERSHIP OF DOCUMENTS
DRAWINGS AND SPECIFICATIONS AS INSTRUMENTS OF SERVICE ARE AND SHALL REMAIN THE PROPERTY OF THE DESIGNER WHETHER THE PROJECT FOR WHICH THEY WERE PREPARED IS EXECUTED OR NOT. THEY ARE NOT TO BE USED ON OTHER PROJECTS OR EXTENSIONS TO THIS PROJECT EXCEPT BY AGREEMENT IN WRITING AND WITH APPROPRIATE COMPENSATION TO Narkweather Architects Inc.
COPYRIGHT 2016 Narkweather Architects

CITY OF RANCHO MIRAGE

PROJECT DESCRIPTION: OBSERVATORY
SITE ADDRESS: Rancho Mirage Public Library 71-100 California 111, Rancho Mirage, CA 92270

SHEET CONTENT
ELECTRICAL SINGLE LINE DIAGRAM

DRAWING SCALE: NONE

ISSUE DATE		
MONTH	DAY	YEAR
SEPT.	29	2016

1	REVISION DATE:
2	REVISION DATE:
3	REVISION DATE:
	REVISION DATE:
	REVISION DATE:

(PLAN CHECK ENGINEER STAMP)
RECOMMENDED FOR APPROVAL BY: LELAND E. COLE R.C.E. 47159 EXP. 12/31/17 — 9/27/16 DATE
APPROVED BY CITY OF RANCHO MIRAGE: — DATE
BUILDING & SAFETY DIVISION R.C.E. & SIGN OFFICIAL — DATE

DRAWING NUMBER
E1.2
SHEET # 52 OF 56
PRIVATE REFERENCE #
CITY REFERENCE #

Bid Set - 10/07/2016

GENERAL NOTES

1. UTILITY POINT OF SERVICE AND WORK / MATERIAL SHOWN ARE BASED UPON PRELIMINARY ONLY. CONTRACTOR SHALL COORDINATE EXACT REQUIREMENTS BY THE UTILITY COMPANIES PRIOR TO BID.
2. CONTRACTORS SHALL COORDINATE WITH THE UTILITY COMPANY FOR FINAL AND EXACT WORK / MATERIAL REQUIREMENTS AND CONSTRUCT TO UTILITY COMPANY ENGINEERING PLANS AND SPECIFICATIONS ONLY. CONTRACTOR SHALL FURNISH AND INSTALL ALL CONDUIT, PULL WIRES, CABLES PULLBOXES, CONCRETE ENCASEMENT OF CONDUITS, TRANSFORMER PAD, BARRIERS, POLE RISERS, TRENCHING AND BACKFILL, AND PAY ALL UTILITY CO. FEES AND INCLUDE ALL REQUIREMENTS IN SCOPE OF WORK.
3. CONTRACTOR SHALL PROVIDE ANY NECESSARY INGROUND PULLBOXES FOR BRANCH CIRCUITING OR LOW VOLTAGE CONDUIT AS REQUIRED NOT TO EXCEED THE MAXIMUM NUMNER OF (4) 90 DEGREE BENDS IN A SINGLE CONDUIT RUN.
4. CONTRACTOR SHALL COORDINATE ROUTING OF UNDERGROUND CONDUIT RUNS, PLACEMENT OF PULLBOXES, ETC. WITH ALL TRADES PRIOR TO TRENCHING / INSTALLATION.

KEYED NOTES

1. CONTRACTOR TO CONNECT NEW LIGHTING FIXTURES TO EXISTING LIBRARY SITE BOLLARD LIGHTING CIRCUIT.

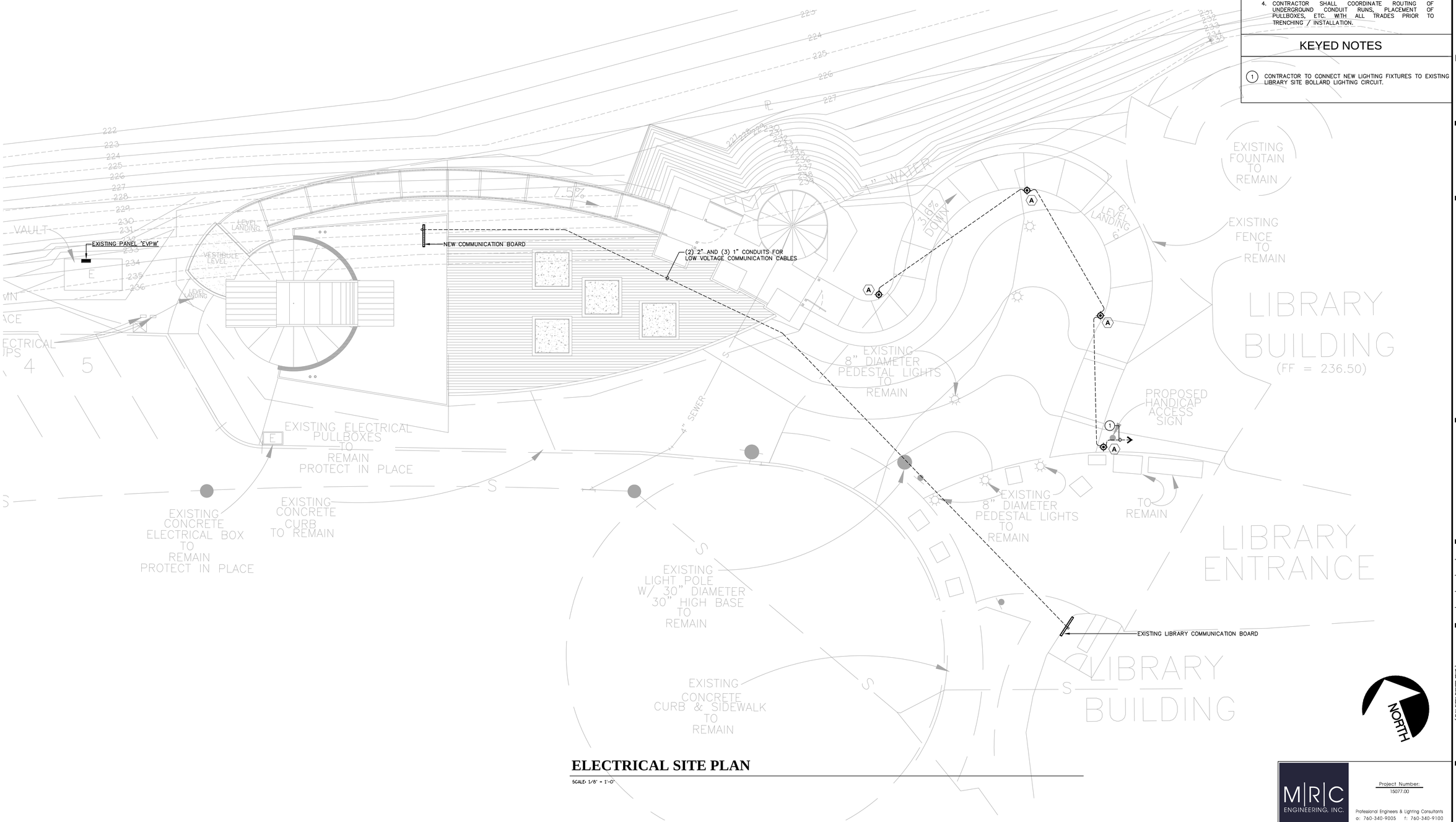

ELECTRICAL SITE PLAN

SCALE: 1/8" = 1'-0"

M|R|C ENGINEERING, INC.

Project Number: 15077.00

Professional Engineers & Lighting Consultants
o: 760-340-9005 f: 760-340-9100
PALM DESERT | SANTA ANA | SAN DIEGO

REGISTERED PROFESSIONAL ENGINEER RANDALL V. MOSS No. E13453 Exp. 09/30/18 ELECTRICAL STATE OF CALIFORNIA

Narkweather ARCHITECTS INC.
73 330 HWY 111, SUITE A / PALM DESERT, CA 92260-4016
PHONE: (760) 346-4090 / E-MAIL: info@narkweather.net

OWNERSHIP OF DOCUMENTS
DRAWINGS AND SPECIFICATIONS AS INSTRUMENTS OF SERVICE ARE AND SHALL REMAIN THE PROPERTY OF THE DESIGNER WHETHER THE PROJECT FOR WHICH THEY WERE PREPARED IS EXECUTED OR NOT. THEY ARE NOT TO BE USED ON OTHER PROJECTS OR EXTENSIONS TO THIS PROJECT EXCEPT BY AGREEMENT IN WRITING AND WITH APPROPRIATE COMPENSATION TO Narkweather Architects Inc.
COPYRIGHT 2016 Narkweather Architects

CITY OF RANCHO MIRAGE

PROJECT DESCRIPTION: **OBSERVATORY**
Rancho Mirage Public Library
SITE ADDRESS: *71-100 California 111, Rancho Mirage, CA 92270*

SHEET CONTENT
ELECTRICAL SITE PLAN

DRAWING SCALE: 1/8" = 1'-0"

ISSUE DATE		
MONTH	DAY	YEAR
SEPT.	29	2016

1	REVISION DATE:
2	REVISION DATE:
3	REVISION DATE:
	REVISION DATE:
	REVISION DATE:

(PLAN CHECK ENGINEER STAMP)
RECOMMENDED FOR APPROVAL BY: LELAND E. COLE — DATE 9/27/16
REG. 47159 EXP. 12/31/17
APPROVED BY CITY OF RANCHO MIRAGE: — DATE
WILLIAM A. DIOS, CITY ENGINEER
R.C.E. 36916, EXP. 6/30/17

DRAWING NUMBER
E2.0
SHEET # 53 OF 56
PRIVATE REFERENCE #
CITY REFERENCE #

Bid Set - 10/07/2016

TYPE	SYMBOL	FIXTURE MANUFACTURE / MODEL NUMBER	WATTAGE	VOLTAGE	LAMP	DESCRIPTION AND NOTES	MOUNTING		
							TO	TYPE	HEIGHT
A		TO MATCH EXISTING	50	120	MATCH EXISTING	BOLLARD TO MATCH EXISTING	CONCRETE BASE	SURFACE	GROUND
B		HE WILLIAMS #ASMS-4-L46-A-DIM-120	47	120	LED	4' LINEAR WRAP AROUND	CEILING	SURFACE	PER STRUCTURE
C		INSIGHT #QD-6-15-1-TN-VS	18	120	LED	RGB STEP LIGHT	WALL	RECESSED	18"
D		INSIGHT #QD-6-15-1-TN-VS	18	120	LED	RGB STEP LIGHT	WALL	RECESSED	18"
E		ACCLAIM LIGHTING #DFG-241-AHL-N	104	120	LED	INDIRECT	WALL	SURFACE	8'-0"
F		TERON LIGHTING EE-PRF-L12.5-120-WLL-SM-30K	13	120	LED	SURFACE MOUNT- DIMMABLE	CEILING	SURFACE	PER STRUCTURE
G		ACCLAIM LIGHTING #FLEXSE	5W/FT	24	LED	RGBW EXTERIOR LED TAPE LIGHT. PROVIDE A FLKEXL CHANNEL	RAILING	SURFACE	PER STRUCTURE

NOTE: CONTRACTOR TO PROVIDE DMX CONTROLLER FOR FIXTURE TYPES 'C', 'D', 'E', AND 'G'. PROVIDE ALL WIRING AS REQUIRED FOR CONTROLS.

ELECTRICAL LIGHT FIXTURE SCHEDULE

SCALE: N/A

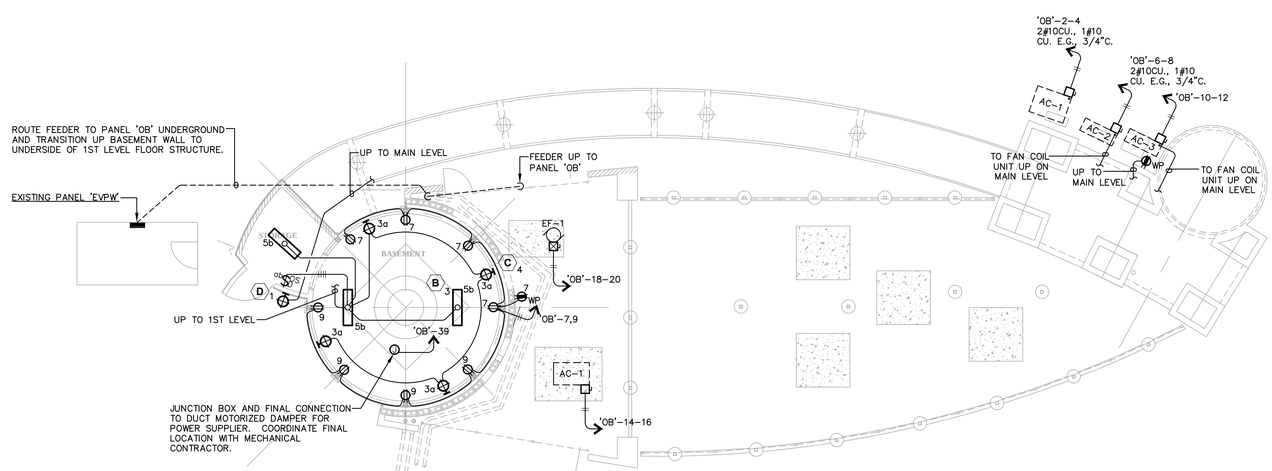

ELECTRICAL BASEMENT PLAN

SCALE: 1/8" = 1'-0"

M|R|C ENGINEERING, INC.

Project Number: 15077.00

Professional Engineers & Lighting Consultants
o: 760-340-9005 f: 760-340-9100
PALM DESERT | SANTA ANA | SAN DIEGO

REGISTERED PROFESSIONAL ENGINEER
RANDALL V. MOSS
No. E13453
Exp. 09/30/18
ELECTRICAL
STATE OF CALIFORNIA

Narkweather ARCHITECTS INC.
73 330 HWY 111, SUITE A / PALM DESERT, CA 92260-4016
PHONE: (760) 346-4090 / E-MAIL: info@narkweather.net

OWNERSHIP OF DOCUMENTS
DRAWINGS AND SPECIFICATIONS AS INSTRUMENTS OF SERVICE ARE AND SHALL REMAIN THE PROPERTY OF THE DESIGNER WHETHER THE PROJECT FOR WHICH THEY WERE PREPARED IS EXECUTED OR NOT. THEY ARE NOT TO BE USED ON OTHER PROJECTS OR EXTENSIONS TO THIS PROJECT EXCEPT BY AGREEMENT IN WRITING AND WITH APPROPRIATE COMPENSATION TO Narkweather Architects Inc.
COPYRIGHT 2016 Narkweather Architects

CITY OF RANCHO MIRAGE

PROJECT DESCRIPTION: OBSERVATORY
Rancho Mirage Public Library

SITE ADDRESS: 71-100 California 111, Rancho Mirage, CA 92270

SHEET CONTENT
ELECTRICAL BASEMENT PLAN

DRAWING SCALE: 1/8" = 1'-0"

ISSUE DATE		
MONTH	DAY	YEAR
SEPT.	29	2016

1	REVISION DATE:
2	REVISION DATE:
3	REVISION DATE:
	REVISION DATE:
	REVISION DATE:

(PLAN CHECK ENGINEER STAMP)

RECOMMENDED FOR APPROVAL BY: LELAND E. COLE — 9/27/16 DATE
R.E.C. 47159 EXP. 12/31/17
APPROVED BY CITY OF RANCHO MIRAGE: _____ DATE
WILLIAM A. DIXOS, CITY ENGINEER
R.C.E. 51510, EXP. 6/30/2017

DRAWING NUMBER
E3.0
SHEET # 54 OF 56
PRIVATE REFERENCE #
CITY REFERENCE #

Bid Set - 10/07/2016

KEYED NOTES

1. 30 AMP, 2-POLE, DISCONNECT SWITCH TO DOME AZIMUTH MOTORS/CONTROLLERS. VERIFY FINAL LOCATION WITH DOME SUPPLIER.
2. 30 AMP, 2-POLE, DISCONNCECT SWITCH TO DOME SHUTTER MOTORS/CONTROLLERS. VERIFY FINAL LOCATION WITH DOME SUPPLIER.
3. FLOOR OUTLET SHALL BE IN A COMBINED UTILITIES BOX SYSTEMS, MODEL NO. WP-8G FLUSH MOUNT FLOOR BOX. EXTEND THE 1.5" DRAIN LINE FROM BOTTOM OF BOX ENCLOSURE OUT OF THE NORTH FACE OF THE CONCRETE PIER.
4. CONTRACTOR SHALL STUB OUT (1) 3/4" CONDUIT TO ROOF FROM THE BUILDINGS MAIN COMMUNICATION BOARD. FIELD COORDINATE FINAL STUB OUT LOCATION.
5. CIRCUIT THROUGH LIGHTING CONTROL PANEL, REFER TO DETAIL 6, E1.1.
6. PROVIDE LOW VOLTAGE LIGHTING CONTROL STATION.

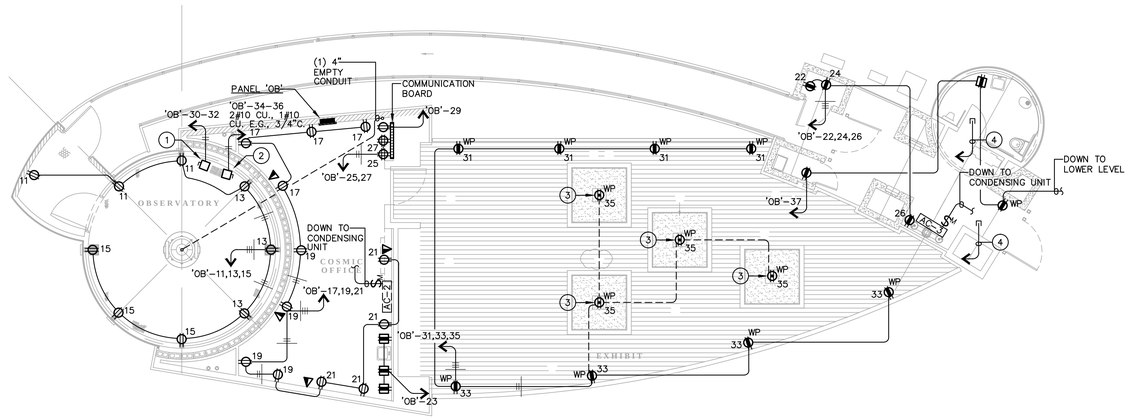

ELECTRICAL POWER PLAN

SCALE: 1/8" = 1'-0"

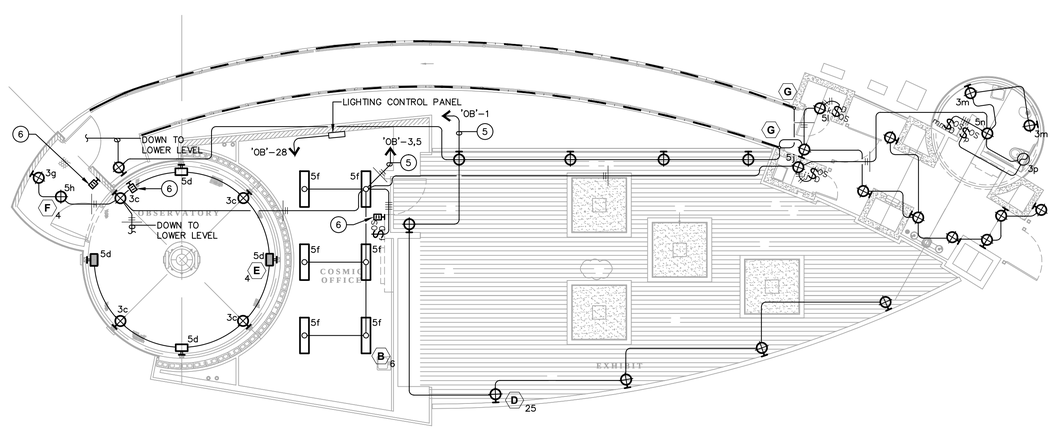

ELECTRICAL LIGHTING PLAN

SCALE: 1/8" = 1'-0"

NORTH

M|R|C ENGINEERING, INC.

Project Number: 15077.00

Professional Engineers & Lighting Consultants
o: 760-340-9005 f: 760-340-9100
PALM DESERT | SANTA ANA | SAN DIEGO

REGISTERED PROFESSIONAL ENGINEER
RANDALL V. MOSS
No. E13453
Exp. 09/30/18
ELECTRICAL
STATE OF CALIFORNIA

Narkweather ARCHITECTS INC.
73 330 HWY 111, SUITE A / PALM DESERT, CA 92260-4016
PHONE: (760) 346-4090 / E-MAIL: info@narkweather.net

OWNERSHIP OF DOCUMENTS
DRAWINGS AND SPECIFICATIONS AS INSTRUMENTS OF SERVICE ARE AND SHALL REMAIN THE PROPERTY OF THE DESIGNER WHETHER THE PROJECT FOR WHICH THEY WERE PREPARED IS EXECUTED OR NOT. THEY ARE NOT TO BE USED ON OTHER PROJECTS OR EXTENSIONS TO THIS PROJECT EXCEPT BY AGREEMENT IN WRITING AND WITH APPROPRIATE COMPENSATION TO Narkweather Architects Inc.
COPYRIGHT 2016 Narkweather Architects

CITY OF RANCHO MIRAGE

PROJECT DESCRIPTION: **OBSERVATORY**
Rancho Mirage Public Library
SITE ADDRESS: *71-100 California 111, Rancho Mirage, CA 92270*

SHEET CONTENT
ELECTRICAL PLANS

DRAWING SCALE: 1/8" = 1'-0"

ISSUE DATE		
MONTH	DAY	YEAR
SEPT.	29	2016

1	REVISION DATE:
2	REVISION DATE:
3	REVISION DATE:
	REVISION DATE:
	REVISION DATE:

(PLAN CHECK ENGINEER STAMP)
RECOMMENDED FOR APPROVAL BY: 9/27/16 DATE
LELAND E. COLE
R.E.C. 47159 EXP. 12/31/17
APPROVED BY CITY OF RANCHO MIRAGE: DATE
WILLIAM A. DIAZ, CITY ENGINEER
R.C.E. 51510, EXP. 6/30/2017

DRAWING NUMBER
E4.0
SHEET # 55 OF 56
PRIVATE REFERENCE #
CITY REFERENCE #

Bid Set - 10/07/2016

GENERAL LANDSCAPE NOTES

1. OWNER'S REPRESENTATIVE TO APPROVE PLANTING LOCATIONS PRIOR TO THE INSTALLATION OF IRRIGATION AND PLANTING. CONTRACTOR SHALL STAKE TREE LOCATIONS WITH 3' LATH FOR APPROVAL BY OWNER'S REPRESENTATIVE AND OR LANDSCAPE ARCHITECT.

CONTRACTOR SHALL SPOT SHRUBS AND VINES IN CONTAINERS ABOVE GROUND PRIOR TO DIGGING PITS AND PRIOR TO THE INSTALLATION OF IRRIGATION FOR APPROVAL BY OWNER'S REPRESENTATIVE AND OR LANDSCAPE ARCHITECT BEFORE PLANTING.

2. UNLESS FIELD CONDITIONS PROHIBIT, LOCATE TREES/PALMS NO CLOSER THAN 6 FEET TO SIDEWALKS, WALLS, CURBS, DRIVEWAYS, ETC.

3. UNLESS FIELD CONDITIONS PROHIBIT, LOCATE SHRUBS NO CLOSER THAN 3 FEET TO SIDEWALKS, WALLS, CURBS, DRIVEWAYS, BUILDINGS, ETC.

4. LANDSCAPE CONTRACTOR SHALL PROVIDE OWNER WITH $1,000.00 (ONE THOUSAND) OF ADDITIONAL LANDSCAPE CONSTRUCTION SERVICES TO BE USED DURING AND AT THE END OF THE CONSTRUCTION PROCESS AT THE DISCRETION OF THE OWNER / LANDSCAPE ARCHITECT.

5. QUANTITIES LISTED ARE NOT INTENDED FOR ACCURATE BIDDING USE. PLANS TAKE PRECEDENCE.

6. PROTECT-IN-PLACE ALL EXISTING LANDSCAPE & HARDSCAPE ADJACENT TO CONSTRUCTION AREA. REPLACE IN-KIND MATERIAL, LANDSCAPE & OR HARDSCAPE, THAT WAS DAMAGED OR HAS DIED DURING THE CONSTRUCTION PROCESS AT NO EXTRA CHARGE TO THE OWNER.

CONTRACTOR SHALL "PHOTO DOCUMENT" EXISTING DAMAGES TO LANDSCAPE & HARDSCAPE AND SUBMIT DOCUMENT TO THE OWNER PRIOR TO CONSTRUCTION.

7. EXISTING MASONRY BENCHES SHALL BE PROTECTED AND STORED PER OWNER'S DIRECTION. FIELD VERIFY LOCATION AND NUMBER OF BENCHES (5+/-).

IRRIGATION NOTES

1. ADD DRIP EMITTERS AS-REQUIRED TO ACCEPT NEW LANDSCAPE.
2. DRIP EMITTER TYPE (E.G. RAIN BIRD, ETC.) TO MATCH EXISTING. FIELD VERY.
3. USE 1 - 2 GALLON PER HOUR EMITTER FOR EACH LANTANA. USE 2 - 2 GALLON PER HOUR EMITTERS FOR EACH RED BIRD OF PARADISE.
4. REPLACE IN-KIND ALL IRRIGATION MAINLINE IN CONSTRUCTION AREA. FIELD VERIFY.
5. REPLACE-IN-KIND ALL IRRIGATION CONTROL WIRE IN CONSTRUCTION AREA.
6. REPLACE ANY IRRIGATION, IN & OUTSIDE THE CONSTRUCTION AREA, DAMAGED DURING CONSTRUCTION AT NO EXTRA COST TO THE OWNER.
7. REPLACE ANY ADJACENT IRRIGATION NOT FUNCTIONING PROPERLY WITHIN 20 FEET OF CONSTRUCTION AREA. FIELD VERIFY.
8. CONNECT NEW DRIP EMITTERS TO A "NEW 1" DRIP VALVE" AND LOCATE THE VALVE IN A NEW TAN PLASTIC VALVE BOX. VALVE TO MATCH EXISTING DRIP VALVES (E.G. RAIN BIRD, ETC.). FIELD VERIFY.
   - INSTALL 1 CU.FT. OF GRAY 3/4" GRAVEL IN BOTTOM OF VALVE BOX.
   - CONNECT NEW VALVE TO EXISTING CONTROLLER. RUN NEW CONTROL WIRE(S) TO TO EXISTING CONTROLLER AS REQUIRED.
9. CONTRACTOR SHALL WATER ALL PLANT MATERIAL EFFECTED BY THE ENTIRE CONSTRUCTION PROCESS. METHODS MAY BE: 1) HAND WATERING & OR 2) TEMPORARY IRRIGATION SYSTEM. TEMPORARY WATERING SHALL OCCUR INSIDE AND OUTSIDE THE CONSTRUCTION ZONES. FIELD VERIFY.
10. PROTECT IN PLACE: VALVES, QUICK COUPLERS, VALVE BOXES.
11. SHRUB & TREE EMITTERS / BUBBLERS SHALL BE VALVED SEPARATELY.
12. INSTALL EMITTER / BUBBLERS ON UP-HILL SIDE OF PLANT / TREE .
13. LANDSCAPE CONTRACTOR SHALL VERIFY EXISTING CONTROLLER LOCATION & ADD STATIONS & WIRE(S) WHEN & IF REQUIRED. IF IT IS NOT POSSIBLE TO ADD STATIONS TO EXISTING CONTROLLER THEN CONTRACTOR SHALL INSTALL ADDITIONAL CONTROLLER(S) AS REQUIRED AT NO EXTRA COST TO THE OWNER. FIELD VERIFY.
14. SET EMITTER HEIGHTS BETWEEN 2 TO 3 INCHES ABOVE FINISH GRADE.
15. INSTALL SEPARATE "GROUND-COOLING WATERING SYSTEM" PER OWNER'S DIRECTION.
   - SYSTEM SHALL HAVE SEPARATE VALVE(S). T.B.D.
   - ON / OFF SYSTEM SHALL CONSIST OF THE FOLLOWING:
     A. MANUAL ON / OFF
     B. VALVE(S) SHALL BE CONNECTED TO EX. CONTROLLER.
   - INSTALL RAIN BIRD 1812-SAM-PRS SERIES POP-UP SPRAY HEADS. APPROXIMATELY 32 HEADS ON SWING JOINTS. VERIFY WITH OWNER.
   - SPRAY NOZZLE PER OWNER. T.B.D.

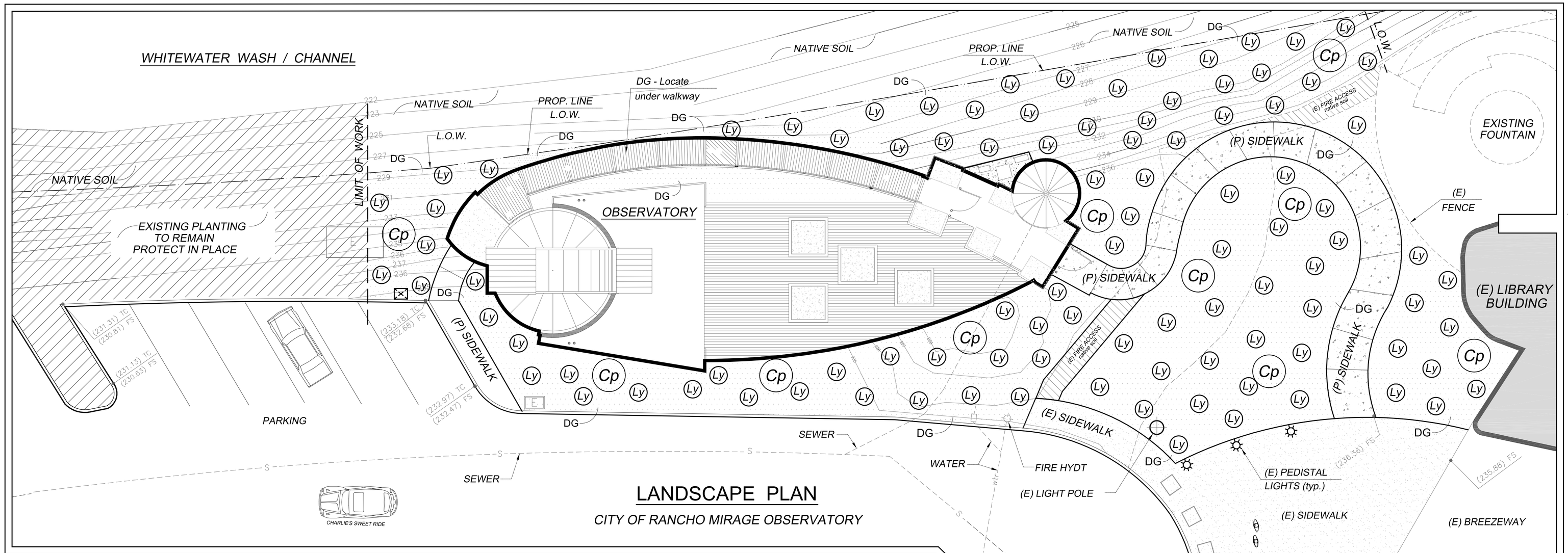

LANDSCAPE PLAN

CITY OF RANCHO MIRAGE OBSERVATORY

ABBREVIATIONS

(E) = EXISTING
typ. = TYPICAL
PROP. = PROPERTY
L.O.W. = LIMIT OF WORK
(P) = PROPOSED

VICINITY MAP
no scale

LEGEND

SYM.	QTY.	NAME & WATER USE	SIZE	COMMENTS
Ly	98	LANTANA MONTEVIDENSIS ' Gold Mound ' Gold Mound Lantana - MOD 0.5	5 GALLON	Ground Cover. 8' wide x 2.5' high Yellow gold flowers year round.
DG		DG = GRAVEL 1" - 3" DIAMETER (CRUSHED) TYPE: APACHE SUNSET 8,000 SQUARE FEET +/-		Contractor to provide Owner sample(s) of D.G. for approval prior to purchase by Contractor. Available at: South West Boulder Phone: 877.792.7625
Cp	10	CAESALPINIA PULCHERRIMA Red Bird of Paradise - Mod 0.5	15 GALLON	Green Foliage. 7' x 8' wide. Flowers: Reddish to Orange in spring. Semi-Deciduous

NOTE:

OBVIOUSE ERRORS OR OMISSIONS VIEWED ON THE PLANS SHALL BE BROUGHT TO THE ATTENTION OF THE LANDSCAPE ARCHITECT PRIOR TO SUBMITTING BID.

CONSTRUCTION CONTRACTOR AGREES THAT IN ACCORDANCE WITH GENERALLY ACCEPTED CONSTRUCTION PRACTICES, CONSTRUCTION CONTRACTOR WILL BE REQUIRED TO ASSUME SOLE AND COMPLETE RESPONSIBILITY FOR JOB SITE CONDITIONS DURING THE COURSE OF CONSTRUCTION OF THE PROJECT, INCLUDING SAFETY OF ALL PERSONS AND PROPERTY; THAT THIS REQUIREMENT SHALL BE MADE TO APPLY CONTINUOUSLY AND NOT BE LIMITED TO NORMAL WORKING HOURS, AND CONSTRUCTION CONTRACTOR FURTHER AGREES TO DEFEND, INDEMINIFY AND HOLD DESIGN PROFESSIONAL HARMLESS FROM ANY AND ALL LIABILITY, REAL OR ALLEGED, IN CONNECTION WITH THE PERFORMANCE OF WORK ON THIS PROJECT.

GENERAL NOTE

1. ELECTRIC PANEL HOUSING, (under carport adjacent to observatory) APPROXIMATELY 6' x 8', WITH DOOR, TO BE TOTALLY SHEATHED IN COR-TEN MATERIAL, SAME AS USED FOR OBSERVATORY. SHEETS TO BE ALIGNED HORIZONTALLY.

NORTH

0 5 10 20 40

SCALE: 1" = 10'-0"

Prepared by:

RAYMOND C. LOPEZ LICENSED LANDSCAPE ARCHITECT STATE OF CALIFORNIA
Raymond C. Lopez
Signature
Expiration Date
December 31, 2017
Renewal Date
08 25 2016

RAY LOPEZ ASSOCIATES
LANDSCAPE ARCHITECTURE & PLANNING
JACKSON STREET, VISTA SANTA ROSA, CA 92274
(T) 760 / 206-9698 (E) RLAscape@aol.com

PREPARED UNDER THE DIRECT SUPERVISION OF:

Raymond C. Lopez — 09 / 29 / 2016
DATE

RAYMOND C. LOPEZ
LICENSED LANDSCAPE ARCHITECT NO. 3474
EXPIRES 12-31-17

Narkweather ARCHITECTS INC.
73 330 HWY 111, SUITE A / PALM DESERT, CA 92260-4016
PHONE: (760) 346-4090 / E-MAIL: info@narkweather.net

OWNERSHIP OF DOCUMENTS
DRAWINGS AND SPECIFICATIONS AS INSTRUMENTS OF SERVICE ARE AND SHALL REMAIN THE PROPERTY OF THE DESIGNER WHETHER THE PROJECT FOR WHICH THEY WERE PREPARED IS EXECUTED OR NOT. THEY ARE NOT TO BE USED ON OTHER PROJECTS OR EXTENSIONS TO THIS PROJECT EXCEPT BY AGREEMENT IN WRITING AND WITH APPROPRIATE COMPENSATION TO Narkweather Architects Inc.
COPYRIGHT 2016 Narkweather Architects

CITY OF RANCHO MIRAGE
OBSERVATORY
PROJECT DESCRIPTION: Rancho Mirage Public Library
SITE ADDRESS: 71-100 California 111, Rancho Mirage, CA 92270

SHEET CONTENT
LANDSCAPE PLAN

DRAWING SCALE:
SCALE: refer to plan

ISSUE DATE		
MONTH	DAY	YEAR
SEPT.	29	2016

1 REVISION DATE:
2 REVISION DATE:
REVISION DATE:
REVISION DATE:
REVISION DATE:

(FOR CITY USE ONLY)
RECOMMENDED FOR APPROVAL BY: LELAND E. COLE — 9/27/16 DATE
R.C.E. 47159 EXP. 12/31/17 APPROVED BY CITY OF RANCHO MIRAGE: — DATE
WILLIAM D. PICKS, CITY ENGINEER
R.C.E. 53506 EXP. 6/30/2017

DRAWING NUMBER
L1
SHEET # 56 OF 56
PRIVATE REFERENCE #
CITY REFERENCE #

Bid Set - 10/07/2016